DATALOGGER
MeteoLOG TDL 14

Instruction for use 9.1740.11.009
Software-Version: V2.02 **09/99**

TABLE OF CONTENTS

1. CONSTRUCTION OF THE DATA LOGGER

The MeteoLOG TDL 14 data logger is a complete measurement system to detect and store meteorological data. The instrument is battery-operated, thus allowing it to be set up at site without any mains supply. The exchangeable storage battery is situated in the data logger case. The case, which can be locked, is water-tight (IP65) and very sturdy. The case is made of stainless steel to protect the instrument from electro-magnetic fields. Furthermore, operation in a temperature range from -30° to 50°C is guaranteed.

The instrument is easy to operate, either with the three keys or over the serial interface. The three keys are indicated by "<∆>", "<∇> on" and "<enter>" in the following. The instrument has a two-line, alphanumeric display.

Numerous inputs are available for the connection of measured data transmitters (sensors). A maximum of 10 analog and 4 digital sensors can be connected. The measured values are saved time-controlled in a CMOS-RAM which has been secured against loss of data. This memory is organized as a ring memory and can save either 128 KB or 256 KB. The data can be read out either over a memory card or over a serial interface (V.24/RS232-C or RS422).

An integrated lithium battery buffers the contents of the data memory and the clock operation when no other power supply is available. This means that the saved values and the time are not lost even when there is no additional power supply.

Functional Arrangement of the Data Logger:

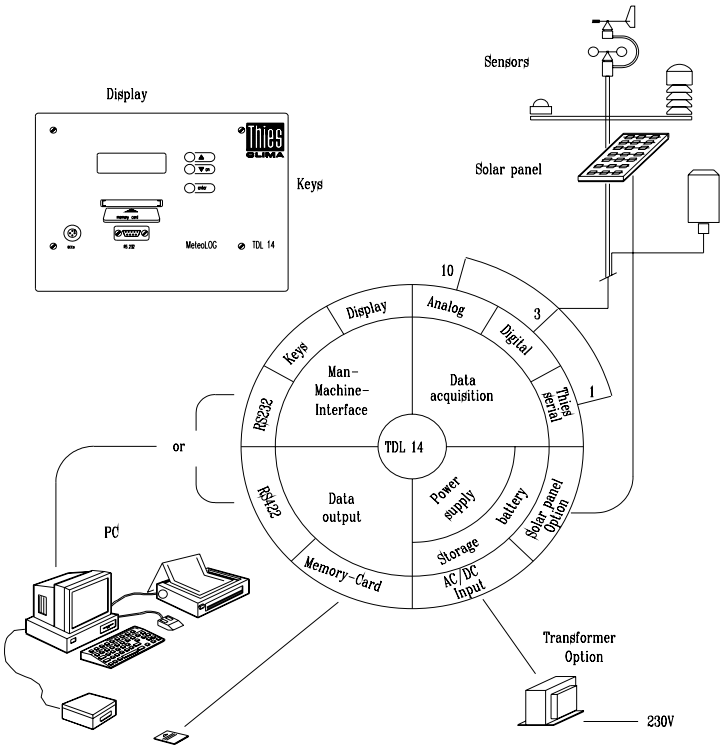

1.1 Models available

The data logger is available in different models geared to the requirements of the respective application:

Order-No.:9.1740.XX.XXX Datalogger TDL 14

.X0 Power supply: 14...24 V AC/ 17...33 V AC/ integrated 12 V storage battery

.X1 Power supply: an additional integrated power transformer (230 V)

.X2 Power supply: an additional integrated power transformer (115 V)

.X3 Power supply: solar charge regulator

.X4 Power supply: solar charge regulator/ power transformer (230 V)

.0X 128 KB-RAM

.1X 256 KB-RAM

.XX0 RS232 and memory card interface

.XX1 RS422 and memory card interface

.0XX Wind speed compact transmitter (4.3519.XX.XXX) and air pressure transmitter PTB 100A

.1XX wind speed standard transmitter (4.3303.XX.XXX) and air pressure transmitter PTB 100A

.2XX wind speed compact transmitter and air pressure transmitter PTB 100B

.3XX wind speed standard transmitter and air pressure transmitter PTB 100B

1.2 Mounting

The data logger is designed to be mounted to a vertical wall. Four screws of 8 mm diameter are required for this. There are special mounting sets available in the following diameters: 48, 60, 80, 90, 102 and 132 mm for installation on a mast.

The transmitter cables are lead through the appropriate cable screwing to the connecting terminals. For details, please refer to the connecting diagram. For installation in line with EMC (electromagnetic compatibility) requirements, lead the shielded cable back through the synthetic insert of the screw coupling (if necessary remove the yellow-green shielded flexible wire).

Cable connection

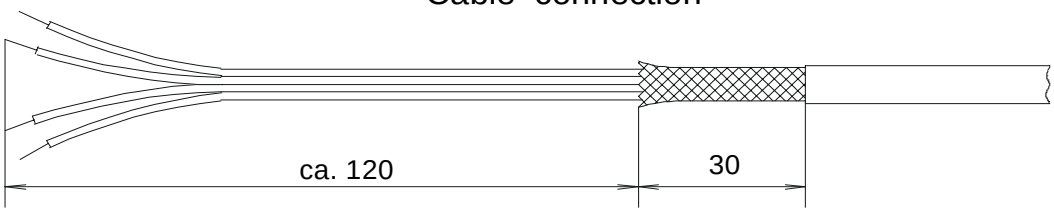

Cable mounting

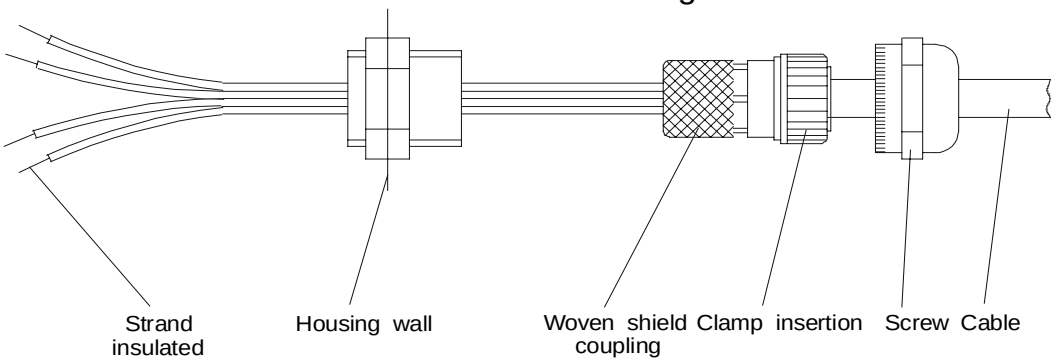

2. OPERATION

The data logger starts automatically as soon as the storage battery is connected. The data logger is reinitialised during this process. Once the instrument has been switched on, first the clock and the date (see section 2.2.2) and then the measurement cycle (see section 2.2.3) should be set. Furthermore note the sensor settings and the language (see section 2.2.5).
The data logger has two data ring memories with a capacity of 128 KB (optional 256 KB). The ring memories can record data continuously i.e. when one of the ring memories is full, then the oldest data record is overwritten. The data ring memories can be read out over the serial interface or over a memory-card (see section 2.3).

2.1 Standards Displays

Switch the display on with key <∇> (just press briefly). The data logger switches off automatically when no key has been activated over a period of 30 seconds or when no character was either transmitted or received over the serial interface. After the display has been switched on, the station name appears. Where "* " appears as the first character, this indicates that the user can change this value (see 2.2). The next display value is reached by pressing the <∇> key. You can return to the preceding value with the <∆> key.

SEQUENCE OF DISPLAY VALUES:

- station name
- date and time
- status of the A/D converter
- language/memory
- channel configuration
- storage battery voltage
- baud rate/memory card
- measurement cycle /memory cycle
- extreme values cycle
- transmitter constants: radiation CM 3/CM 6B
- station elevation
- sensor measured values:
  1. wind speed
  2. wind direction
  3. temperature 1
  4. special input 3/ rel. humidity
  5. special input 5/ air pressure
  6. radiation
  7. precipitation
  8. leaf moistening
  9. special input 4/ tensiometer
  10. temperature 2
  11. temperature 3
  12. temperature 4
  13. special input 1
  14. special input 2
- data output

STATION NAME:

```
*THIES-CLIMA
 • TDL14 V2.02 b
```

X = 0,1,2,3

The station name allows the user to differentiate between the data of several stations. The name (here: „THIES CLIMA“) can be up to 11 characters long. For read-out, this name appears on the memory card respectively it is output with the data over the serial interface. In the second line you find the instrument model („TDL 14“), the software version („V 2.02 b“) and the software variation („0“ „1“,“2“ or „3“). The software variation differentiates between the two opto-electronic wind speed transmitter models (sensor 1) and the air transmitter (sensor 5)

version 0 (9.1740.xx.0xx) Compact Wind Transmitter and air pressure transmitter PTB 100A
version 1 (9.1740.xx.1xx) Standard Wind Transmitter and air pressure transmitter PTB 100A
version 2 (9.1740.xx.2xx) Compact Wind Transmitter and air pressure transmitter PTB 100B
version 3 (9.1740.xx.3xx) Standard Wind Transmitter and air pressure transmitter PTB 100B

DATE / TIME:

```
*date : 01.01.93
 time : 12:00:00
```

Display of logger date and time.

STATUS OF A/D CONVERTER:

```
  A/D: OK          Status:
 0  0  512  1023
```

OK (A/D converter is functioning properly)
Err (A/D converter defective)

Self-test of the A/D converter
Setpoint: 1021 ±2

Self-test of the A/D converter
Setpoint: 512 ±12

Current measured offset
Setpoint: 0 - 3

Offset, with which all other measurements will be corrected (is measured at the time when the instrument is switched on).

LANGUAGE / MEMORY:

```
Lang   : English
Memory : 128 KB
```

Displays the language selected (DIP switch S 4.1, see 2.2.5) and memory version (128 KB: 9.1740.0x.xxx, 256 KB 9.1740.1x.xxx).

CHANNEL CONFIGURATION:

```
*Channel-config.:
 xxxxx xxxxx xxxx
```

X = 0 sensor not reporting
X = 1 sensor reporting

Sensor 1 14

Displays the configured measurement channels („1"→ reporting). Non-configured measurement channels („0"→ not reporting) are indicated on the display and on the serial online commands by dashes („-„). These channels are stored with the general error identification („?").
The first number to the left stands for sensor 1 (wind speed), the last for sensor 14.

STORAGE BATTERY VOLTAGE

accumulator : OK 12.5 V

OK : Voltage >11.5 V
!!!: Voltage 10.6 ... 11.5 V
Low: voltage <10.5
charge/ change batteries recommended

Displays the measured voltage of the storage battery. The actual storage battery voltage is higher (approx. 0.2 V). Analog measurements become imprecise below a measured voltage of 8.5 V.

***Please Note**:*
The storage battery should not be discharged below 10.5 V because, first of all, there is no appreciable capacity available anymore and, secondly, because the operating life of the battery will be considerably shortened. Please change or charge the storage battery while „!!!" still appears on the display.

***BAUD RATE** / memory card*

* Baudrate 4800 Bd

Memory Card 3,0 V OK

OK : Voltage > 2,7V
!!!: Voltage 2,6...2,7V
Low: Voltage <2,6V

No memory card in the holder

memory card in the holder of the data logger

Displays the baud rate:
Settings:
300 Bd, 600 Bd, 1200 Bd, 2400 Bd, 4800 Bd, 9600 Bd
7 data bits (even) parity
1 stopbit

Displays the voltage of the memory card battery: The measurement is limited to 3.0 V, i.e. higher voltages are not displayed. We recommend that you change the battery when "!!!" appears on the display.

MEASUREMENT CYCLE / MEMORY CYCLE:

*Meas. cyc: 1 min Memory cyc: 2 min

Displays the measurement cycle and the memory cycle which has been set.

Settings measurement cycle:
1, 2, 3, 4, 5, 6, 10, 12, 15, 20 and 30 seconds also
1, 2, 3, 4, 5, 6, 10, 12, 15, 20, 30 and 60 minutes (see section 2.2.3)
Settings memory cycle:
1, 2, 3, 4, 5, 6, 10, 12, 15, 20, 30 and 60 minutes

***EXTREME VALUE CYCLE**:*

* Extreme cycle: 2 min

Displays the extreme value cycle.

Settings extreme value cycle:
1, 2, 3, 4, 5, 6, 10, 12, 15, 20, 30 and 60 minutes
(see section 2.2.4)

TRANSMITTER CONSTANTS:

CONCERNING SENSOR 6: RADIATION CONSTANT PYRANOMETER CM3/ CM6B

*Pyr. CM3 const: 25.0000 mV

Displays the radiation constant set on the "pyranometer CM3" or „CM6B“ sensor. The value to be set is stipulated in the sensor's test certificate.

Setting range: 9.0000...35.9999 mV/ 1000 Wm^{-2}

CONCERNING SENSOR 5: STATION ELEVATION:

* Station altitude: NNNN m

Inputting the station elevation is only of significance if an air pressure sensor has been connected to special input 5 (S4.5 = close, see 2.2.5).
Should you measure air pressure, then enter the station elevation here in order to obtain air pressure reduced to sea level (so-called "QFF").
When you enter station elevation 0 m, the sensor signal is output directly (air pressure at station elevation, so-called "QFE").
Elevations between 0 and 2000 m can be set (version 0 and 1, transmitter PTB 100A)
Elevations between 0 and 4000 m can be set (version 2 and 3, transmitter PTB 110B)

SENSOR MEASURED VALUES:

Please note the DIP switch setting on certain sensors (S4, see 2.2.5)

SENSOR 1 WIND VELOCITY

Windvelocity: NN.N m/s

Outputs the mean wind speed per second (measured once a second).

S4.2 = S4.3 = open	S4.2 = S 4.3 = close
Sensor = opto-electronic	Sensor: Reed contact 0...60,0 m/s 0,8 m/s

Software version 0 or 2 (9.1740.xx.0xx): connection of the compact wind transmitter (for example 4.3519.xx.xxx) (9.1740.xx.2xx)

measuring range: 0,5...60 m/s
resolution: 0,1 m/s

Software version 1 or 3 (9.1740.xx.1xx): connection of the standard wind transmitter (for example 4.3303.xx.xxx) (9.1740.xx.3xx)

measuring range: 0,3...52,9 m/s
resolution: 0,1 m/s

SENSOR 2 WIND DIRECTION

```
Wind direction:
   NNN  °
```

Outputs the measured wind direction (continuous measurement). "???.?" appears if there has been a measurement error (for example, the sensor is not connected, the measuring range has been exceeded etc.).
Measuring range: 0...360°
Resolution: ≤ 3° (valid for a wind direction transmitter with 8 bits)
≤ 12° (valid for a wind direction transmitter with 5 bits (compact))
Please Note: The 5-bit transmitter or the 8-bit transmitter are identified automatically.

SENSOR 3 TEMPERATURE 1

```
Temperature 1:
 NNN.N °C
```

Outputs the instantaneous measured temperature (measurement once a second). "???.?" is output if there has been a measurement error (for example, the sensor is not connected, the measuring range has been exceeded)
Measuring range: -30...+70°C
Resolution: 0,1°C

SENSOR 4 SPECIAL INPUT 3/ REL. HUMIDITY

```
S4.4 = open
```

```
Input 3  0-1V:
  NNN.N %
```

Outputs the measured input voltage in % (measurement once a second). For measurements above 102,2%, the ouput is limited to 102,3%.
Measuring range: 0...100% (corresponds to 0-1 V)
Resolution: 0,1 %

```
S4.4 = close
```

```
rel. humidity:
 NNN.N %
```

Outputs the instantaneous measured air pressure (measurement once a second). ???.? appears if the measuring range has been exceeded or not reached.
Measuring range: 800...1060 hPa*
Resolution: ≤ 0,3 hPa
*The measuring range is relative to a station elevation of 0 m. The measuring range changes for other station elevations. (please also refer to TRANSMITTER CONSTANTS).

SENSOR 5 SPECIAL INPUT 5/ AIR PRESSURE

```
S4.5 = open
```

```
Input 5  0-5V:
  NNN.N %
```

Outputs the measured input voltage in % (measurement once a second). For measurements above 102,2%, the output is limited to 102,3%.
Measuring range: 0...100 % (corresponds to 0-5 V)
Resolution: 0,1 %

```
S4.5 = close
```

```
Air pressure:
NNN.N hPa
```

Outputs the instantaneous measured air pressure (measurement once a second). ???.? appears if the measuring range has been exceeded or not reached.
Version 0 an 1 (Transmitter PTB 100A)
Measuring range: 800...1060 hPa*
Resolution: ≤ 0,3 hPa
Version 2 and 3 (Transmitter PTB 100B)
Measuring range: 600...1060 hPa*
Resolution: ≤ 0,5 hPa
*The measuring range is relative to a station elevation of 0 m. The measuring range changes for other station elevations. (please also refer to TRANSMITTER CONSTANTS).

SENSOR 6 RADIATION

Radiation NNNN W/qm

Outputs the measured radiation (measurement once a second). The measured value depends on the radiation constant of the transmitter (for the setting, please see TRANSMITTER CONSTANTS).

Measuring range: 0...>1328 Wm^{-2}

Resolution: $\leq$ 5 Wm^{-2}

SENSOR 7 PRECIPITATION

Precipitation: NNN.N mm

Outputs the amount of precipitation which has fallen during the current day.
(The sum of all precipitation since midnight, continuous measurement).

Measuring range: 0...99,9 mm

Resolution: 0,1 mm

SENSOR 8 PRECIPITATION

Precipitation: N

Outputs the status of the event (continuous measurement)

1 $\rightarrow$ input closed

0 $\rightarrow$ input open

SENSOR 9 SPECIAL INPUT 4/ TENSIOMETER

S4.6 = open

Input 4 0-5V: NNN.N %

Outputs the measured input voltage in % (measurement once a second). For measurements above 102,2%, the output is limited to 102,3%.

Measuring range: 0...100 % (corresponds to 0-5V)

Resolution: 0,1 %

S4.6 = close

Tensiometer: NNNNN mbar

Outputs the instantaneous soil saturation potential. (Measurement once a second).

Measuring range: -1000...0 mbar

Resolution: 1 mbar

SENSORS 10, 11, 12 TEMPERATURE 2, 3, 4

```
Temperature 2,3,4:
  NNN.N  °C
```

Outputs the instantaneous temperature values (measurement once a second). "???.?" indicates measurement errors (for example the sensor is not connected, the measuring range has been exceeded).
Measuring range: -30...+70°C
Resolution: 0,1°C

SENSORS 13, 14 SPECIAL INPUT 1, 2

```
S4.8 = open
```

```
Input    x 10V/20 mA:
  NNN.N %
```

x = 2

Outputs the measured input voltage (resp. current) in % (measurement once a second). For measurements above 102,2 % the output is limited to 102,3%.
Measuring range:0...100 % (corresponds to 0-10V resp. 0...20 mA)
Resolution: 0,1 %

```
S4.7 = close
```

```
S4.8 = close
```

```
Input    x 4-20 mA:
  NNN.N %
```

x = 1,2

Outputs the measured input voltage (resp. current) in % (measurement once a second). "???.?" appears when the measuring range has been exceeded.
Measuring range:0...100 % (corresponds to 2-10 V resp. 4...20 mA)
Resolution: ≤ 0,2 %

```
S4.7 = open
```

Sensor 13

```
Luminous
I    NNN.N kLux
```

Outputs the measured input voltage (resp. current) in kLux (measurement once a second).
Measuring range:0...100 kLux
Resolution: 0,1 kLux

Please note: You can switch back and forth between current measurement and voltage measurement with the S5 DIP switch (see 2.2.5).

DATA OUTPUT

```
Data output
     ?
```

Starts data output (see section 2.3).

2.2 CHANGING THE PARAMETERS

All display values which appear with a „*“ to the upper left can be changed.
These values are:

Station name, date, time, baud rate, measurement cycle , memory cycle, extreme value cycle, channel configuration, radiation constant and station elevation.

To edit the displayed value, simply press <ENTER> and the <∇> key. The value to be changed is indicated by the flashing cursor. Now release both keys. The value can be raised with the <∆> or lowered with the <∇> key. If the set value is satisfactory,, then press the <ENTER> key to leave the editing mode or to select the next variable.

2.2.1 STATION NAME

The station name is used to identify the measuring site. If several data loggers are in use, each of them should be given a different name. All letters and numbers as well as the underlining "_" and the space bar can be used for the name.

With serial data output, all 11 characters of the station name are output. For output onto a memory-card, the first seven characters are given.

2.2.2 DATE

If an invalid date is entered (for example: 31.4.92), the computer automatically corrects it to the next valid date (for example: 1.5.92).

2.2.3 MEASUREMENT CYCLE

The measurement cycle indicates the time intervals at which the analog and serial sensor values are measured by the data logger. The measurement cycle can be changed during operation without the preceding data being lost. The initial measurement interval set when the instrument is first switched on is 1 minute. All digital counting inputs (for example wind speed, precipitation) are continuously measured independent of the measured value set.

There are 23 different measurement intervals available:
seconds: 1, 2, 3, 4, 5, 6, 10, 12, 15, 20, 30
minutes: 1, 2, 3, 4, 5, 6, 10, 12, 15, 20, 30, 60

The memory cycle indicates the time interval for the saving of measured values. If the memory cycle is not set to the same interval as the measurement cycle, then the measured values are averaged
For example: measurement cycle: 1 minute
memory cycle: 10 minutes

A mean value is determined from 10 measured values and saved. The mean value calculation is carried out by "normal" sensors as an arithmetic mean. The two exceptions are wind direction (vectorial mean) and precipitation (formation of sums).

The measurement cycle can be set as desired. The memory cycle can not in all cases be set to all the possibilities. It must be an integral multiple of the measurement cycle. The data logger observes this automatically.

Please Note: Changing the measurement cycle sometimes also changes the memory cycle and the extreme value cycle.

EXAMPLES:

Measurement Cycle	Memory Cycle / Extreme Value Cycle (Minutes)
? Seconds, 1 Min	all
2 Min	2, 4, 6, 10, 12, 20, 30, 60 Minutes
3 Min	3, 6, 12, 15, 30, 60 Minutes
4 Min	4, 12, 20, 60 Minutes
5 Min	5, 10, 15, 30, 60 Minutes
6 Min	6, 12, 30, 60 Minutes
10 Min	10, 20, 30, 60 Minutes
12 Min	12, 60 Minutes
15 Min	15, 30, 60 Minutes
20 Min	20, 60 Minutes
30 Min	30, 60 Minutes
60 Min	60 Minutes

The measurement cycle influences current consumption. In general, the following holds true: the longer the measurement interval, the lower the power consumption (see section 2.6). The memory cycle influences the mean value memory period.(see section 2.7.1)

2.2.4 EXTREME VALUE CYCLE

The extreme value cycle gives the timepoint the extreme values are saved. It can be set just like the memory cycle (see section 2.2.3). The extreme value cycle influences the extreme value memory period (see section 2.7.2).

2.2.5 DIP-SWITCH SENSOR SETTINGS AND LANGUAGE

Below the front panel of the data logger there is an 8-pole (S4) and a 4-pole DIP switch (S5) to configure a number of sensor settings and the output language. You can only read in the switch setting of S4 after you have switched the instrument on. Readjusting the switch during measurement operation has no effect, i.e. you should adjust the switch during measurement operation (display off) and then switch the data logger on with the on-key. This makes the setting valid for the data logger.

S 4.1	output language
open	German
close	English

Display output appears in accordance with the switch setting.

S 4.2	S 4.3	wind velocity sensor (sensor 1)
open		optoelektronic (Thies)
close		reedcontact (Thies)

S 4.4	special input 3 (sensor 4)
open	0-1 universal-input
close	rel. humidity (Thies)

S 4.5	special input 5 (sensor 5)
open	0-5 V universal-input
close	air pressure transmitter

S 4.6	special input 4 (sensor 9)
open	0-5 V universal-input
close	tensiometer (Thies)

S 4.7	S 5.1	S 5.2	special input 1 (sensor 13)
open	open		0...100 kLux
close	open		2-10 V universal-input
open	close		0-20 mA universal-input
close	close		4-20 mA universal-input

S 4.8	S 5.3	S 5.4	special input 2 (sensor 14)
open	open		0-10 V universal-input
close	open		2-10 V universal-input
open	close		0-20 mA universal-input
close	close		4-40 mA universal-input

2.2.6 CHANNEL CONFIGURATION

In order to be able to change the channel configuration, you must first simultaneously press the <ENTER> key and the <∇> key and then do the following:
The second line is deleted and a question mark appears. Now press the <∇> and the <∆> keys simultaneously for 10 seconds. The countdown appears on the display. After the countdown is concluded, you can adjust the values as you usually do.

2.3 DATA OUTPUT

The Datalogger provides two possibilities to read out the data:

- serial (V.24 / RS232 9.1740.xx.xx0)
  (V.11 / RS422 9.1740.xx.xx1)
- memory card

An external computer can be connected with an appropriate cable to the serial interface of the Datalogger to access the stored data. The transmission of all mean values stored in the memory takes at least 15 minutes at 9600 baud. Data transmission to a memory card is considerably faster (less than 2 minutes) because the data are transferred in parallel.

***Please note**: These times are valid for the 256 KB version (9.1740.1x.xxx).*

All data are transferred in ASCII format (text). This means that any text editing program can be used to examine, edit, manipulate and print the data. Accordingly you are able to conduct further data analyses with standard software, such as table format programs, data banks, etc..

2.3.1 SERIAL DATA OUTPUT

For the output of data over the serial interface, make sure that the memory card is not in its holder. If you leave the memory card in its holder, the data will be written on the memory card! Serial data output can follow by pressing the key or via cable.

We recommend that you use our communications program "KOMDL" to read out the data. Moreover, you can use a standard terminal program (for example "Procomm" or "Terminal" from Windows).

2.3.1.1 CONNECTING CABLE OF THE SERIAL INTERFACE

The serial interface is a "three-wire" connection. The transmission line (TxD) and the receiving line (RxD) must be cross-connected in the cable.

RS232 / V.24 - Output: Order No.: 9.1740.xx.xx0

PC/TERMINAL Sub-D25 (25-pol)		LOGGER terminal strip	LOGGER RS232 Sub-D9
TxD	2 ■ ———	■ 9 RxD	2
RxD	3 ■ ———	■ 11 TxD	3
Ground	7 ■ ———	■ 13 ground	5
Sub-D9			
RxD	2 ■ ——— ———	■ 9 RxD	2
TxD	3 ■ ——— ———	■ 11 TxD	3
Ground	5 ■ ———	■ 13 ground	5

RS422 - Output: Order-No.: 9.1740.xx.xx1

```
Interface-                  LOGGER
converter IC-485SI          Terminal strip
(9.1702.20.000)
RS422

                 shield •  —   ■15 protective ground PE (respectively connect to PG screw
                                                          coupling)
TxD+  1 ■   ———————— ■  8 RxD+
TxD-  2 ■   ———————— ■ 10 RxD-
RxD-  3 ■   ———————— ■ 14 TxD-
RxD+  4 ■   ———————— ■ 12 TxD+
ground  ■   ———————— ■ 13 ground
```

Please Note: *Shielded cable should be used. For line lengths exceeding 100 m, twisted wire in pairs should be used (RxD+/RXD-, TxD+/TxD-). The connection of the shield (pin 15) to protect the instrument from surges (for example lightning) is also important. The manufacturer is <u>not</u> responsible for damages resulting from surges.*

2.3.1.2 COMMAND FORMAT

This section is only important for those who want to use their own communication program.

The commands consists of 4 to 9 bytes:

```
STX  ?  ?  ?  ?  ?  ?  ?  ETX
 |        |            |
02H                   03H
 |    command          |
Ctrl-B              Ctrl-C (respectively Strg-C)
```

LIST OF COMMANDS:

"HH"	Help: shows the list of input commands
"PD"	Powerdown: Datalogger switches off immediately (to save current).
"SS"	mean value memory: output of saved mean values
"GS"	entire mean value memory: only useful if the logger has re-initialized itself in order to rescue data which has not yet been overwritten.
"ts" <T,Mo,J>	output one day's stored data (mean values)
"te" <T,Mo,J>	output one day's stored data (extreme values)

"ds" <T,Mo,J.H.Mi>	output stored data (mean values) from a certain timepoint on
"de" <T,Mo,J.H.Mi>	output stored data (extreme values) from a certain timepoint on

T	:	Day in binary + 28	(29 ... 59)	
Mo	:	Month in binary + 28	(29 ... 40)	
J	:	Year in binary + 28	(28....127)	(without
H	:	Hour in binary + 28	(28 ... 52)	Century)
Mi	:	Minute in binary + 28	(28 ... 77)	

Ex.: STX "ds" 29 33 122 40 28 ETX

1	5	94	12	0

Mean value data from 01.05.1994, 12.00 on are called up.

"EE" extreme value memory: output of extreme values

"LL" logger status: Output logger date and time,
status of the A/D converter,
storage battery voltage,
measurement cycle,
memory cycle,
extreme value cycle

"MM" and "mm" instantaneous measured values:
Output all the values measured by the sensors.
The data are only valid three seconds after the instrument has been switched on.

"MM" Output with sensor identification

"mm" Output as with the mean value data record however with the addition of the second.

"DD" logger date

"DT"<1..31> Enter day: setting the day of the logger
Response: entered day, logger date

"DM" <1..12> Enter month: setting the month of the logger
Response: entered month, logger date

"DJ" <0..99> Enter year: setting the year of the logger
Response: entered year, logger date

"ZZ" logger time

"ZH"<0..23>	Enter hour: setting the hour of the logger Response: entered hour, logger time
"ZM"<0..59>	Enter minute: setting the minute of the logger Response: entered minute, logger time
"XX"	Output of station name, instrument model and software version
CR LF"?" CR LF	Response to an unknown command respectively to an incorrect parameter.

ADDITIONAL CHARACTERS OF IMPORTANCE:

STX (02H)	start of a command
ETX (03H)	end of a command
EOT (04H)	Abort of memory output for the commands: "SS", "GS", "ts", "te", "ds", "de", "EE"
XON (011H)	software handshake (output continues)
XOFF (013H)	software handshake (stops output; 30 second maximum, otherwise the data logger switches off automatically!)

2.3.1.3 SERIAL DATA FORMAT

The data format corresponds to the format of the "UNISOFT" program. Erroneous values are indicated by one or more "?" respectively "!". The data are output in tabular form. The separator character is at least one space (ASCII 32). Lines are concluded with "CR LF".

MEAN VALUES:

DATE LINE:

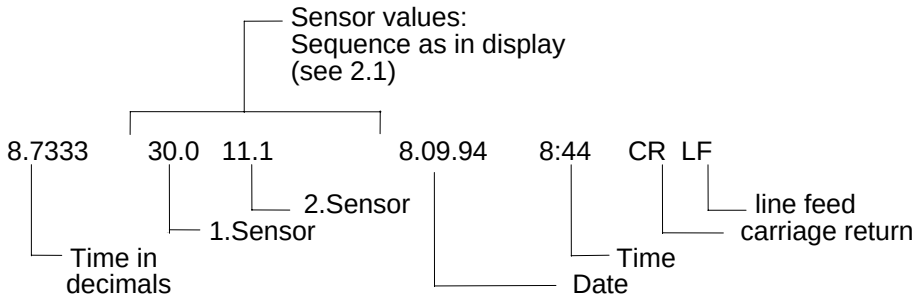

The date and time refer to the end of the measurement.

END LINE: "END OF DATA" "THIES CLIMA" "TDL 14 V2.02"

- Software-version
- Instrument model
- Station name

EXTREME VALUES:

DATE LINE:

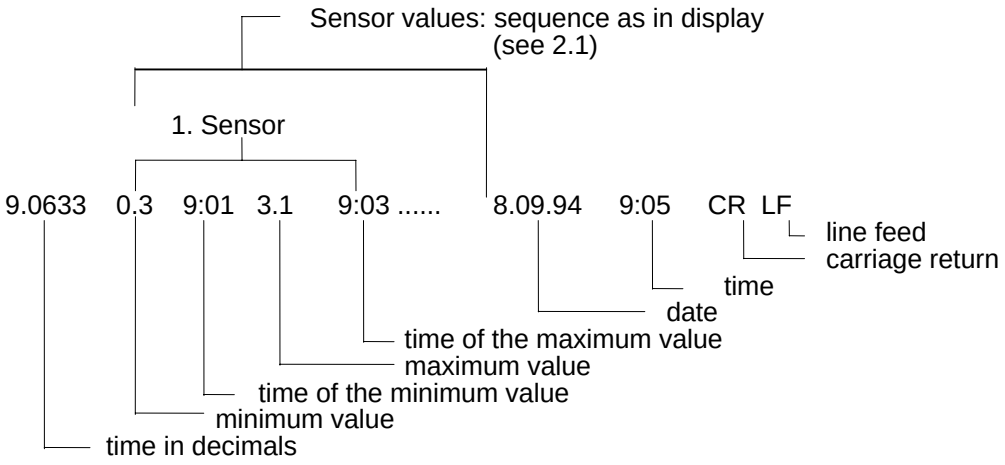

The end lines are the same as for the mean values.

2.3.2 DATA OUTPUT OVER MEMORY-CARD

Output requires a memory card ("STARCARD" from ITT CANNON or compatible) with a memory capacity of at least 256 KBytes. The memory card should only be inserted into the holder of the data logger for read out.

SUGGESTIONS ABOUT USING THE MEMORY-CARD:
Battery-buffered static memories are used for data storage. Thus there must be a functioning battery in the memory card. The battery compartment is situated across from the contacts. To open the battery compartment, set the battery compartment lock to "UNLOCK" (use a tweezers or similar object). Now pull out the battery compartment. After returning the battery compartment to its original position, set the battery lock to "LOCK".

During transport and storage, make sure that the memory card is *always* in the anti-static cover!

The nominal operational life of the battery of the 256 KB memory card (type BS256F1-C) is 4 years, thus when the memory card is not used for a longer period of time, it is advisable to remove the battery.

1. Switch the data logger on with the <∇> key.

2. Insert the memory card into the data logger holder

3. Keep pressing the <∇> key until the words "data output" appear on the display. Continue to press the key (3 seconds) until the words "M-data" appear in the second line of the display.

4. Selecting the memory output: "M" stands for mean values and extreme values
   "E" stands for extreme values
   Mean values press <∇>
   Extreme values press <∆>

5. Press <ENTER>: data output starts. Either "E" or "M" appears in the second line of the display, depending on what has been selected. In addition "MCard" and the number of data records output also appear.

6. Pressing the <ENTER> key interrupts transmission.

7. The end of the transmission is indicated in the display by ""end".

8. Remove the memory card from the holder.

9. Press <ENTER> to be able to operate the data logger "normally" again.

The memory card can be read out by a PC with a reading program and the corresponding reader (THIES accessories). The data format is set up in correspondence with the data lines in section 2.3.1.3. (The only difference: the data from the memory card always have only one space character as the separator.)

2.4 CHANGING THE STORAGE BATTERY

The storage battery, at the latest, has to be replaced when the indicated storage battery voltage drops below 9.0V. However, the storage battery should not be discharged below 11.0 V as there is no appreciable capacity available anymore. The operational life of the storage battery is considerably reduced when operated below 10.5 V! The new storage battery should be "freshly" charged once more as, owing to self-discharge (approx. 3% per month), it may not have its maximum capacity. The stored data are retained during the exchange process. Before the storage battery is disconnected, the data should be secured. Without the storage battery, no measurements are carried out. Before the storage battery is connected, press the <∇> ON key and hold it down. After the battery has been connected and the key released once again, the data logger starts. No power is drawn from the buffer battery when the storage battery is connected (or when there is an external power supply); i.e. during this time, only the self-discharge factor is of importance for the operational life. The buffer battery can only be replaced by the manufacturer. When no power is drawn, the operational life of the buffer battery is 10 years.

Please Note: *During installation it is important to make sure that all terminals are switched voltage-free and that individuals and/or instruments are not endangered!*

2.5 EXTERNAL POWER SUPPLY

2.5.1 DATA LOGGER WITHOUT TRANSFORMER (9.1740.x0.xxx)

The input for external power supply can be used to charge the storage battery and to supply the data logger with current. The terminal is situated below the cover plate for the sensor connections (pin 1 and 2).

The power supply must supply a current of at least 500 mA. The voltage range for direct voltage is 17 to 33 V DC and for alternating current voltage 14 to 24 V AC. Above pin 3 of the terminal there is a red light-emitting diode (LED). This controls the external power supply (LED lights up). The storage battery must always be connected. To switch the data logger on, first connect the storage battery. Then the external power supply can be switched on. Switch-off takes place in reverse order.

2.5.2. DATA LOGGER WITH TRANSFORMER (9.1740.x1.xxx/ 9.1740.x2.xxx/ 9.1740.x4.xxx)

The AC mains voltage on the transformer generates two low-voltages to supply power to the sensor heaters (26 V AC) and to the data logger (14 V AC). We recommend a medium antisurge 1 A-fuse (1 A mtr) to protect the mains voltage.

Please Note: *The connection of protective earth PE to the transformer is absolutely imperative for safety reasons!*

2.5.3 DATA LOGGER WITH SOLAR PANEL (9.1740.x3.xxx/ 9.1740.x4.xxx)

The solar panel is connected over pin 3 and pin 4 on the terminal strip. In the integrated charge regulator in the data logger, the charging voltage changes with the temperature. That is why the storage battery should always be in the data logger case.

Please Note: *The integrated regulator is designed for a solar panel with nominal data 12V/5W. The use of a different panel could destroy the electronics!*

General information of the solar panel:

Solar panels in use in the Northern Hemisphere should be aligned towards the South. For winter operation (with limited solar radiation) we recommend that you set an elevation angle adapted to the site (for Germany approx. 50°). Be careful that the arrangement of sensors or traverses above the panel does not cast shadows. Clean the surface of the solar panel as required (to remove snow, leaves etc.).

2.6 CURRENT CONSUMPTION

As already mentioned in section 2.2.3, the current usage depends on the selected time intervals of data acquisition. It is necessary to differentiate between second and minute intervals, because two different processor modes are employed. In addition one must differentiate between the active phases of operation.

In the following we show how to calculate the current consumption for both modes of operation. Note that these calculations assume that the sensors are only switched on up to the time of data acquisition. However, some sensors must be in operation continuously (e.g. wind velocity sensors). For these cases the additional current consumption must be added to the calculated values. Furthermore, these calculations are only approximations due to the variable performance and ageing of the electronic components and the storage battery. The exact time intervals at which the storage battery needs to be recharged can be determined only by practical experience. The capacity depends greatly on the temperature: For operation below 0° assume only half the capacity.

For the data logger in mains-independent operation (only storage battery and solar panel), we basically recommend that you only set the measurement cycle to greater than or equal to one minute.

2.6.1 QUERY SECONDS

Power consumption is composed of a continuously flowing current I_{cont} and a current which only flows together for approx 0.6 s for measurement of the sensors.

I_{cont} = ca. 11 mA (RS232 / V.24)
= ca. 30 mA (RS422 connect with Interface Converter HSS 100)

The measurement current consists of a permanent component I_{query} and a current I_{sensor} which is dependent on the connected sensors (see section 2.6.3).

I_{query} = 18 mA

The total current I_{mean} can be calculated as follows:

$$I_{mean} = I_{cont} + \frac{I_{query} + I_{sensor}}{\text{Measurement cycle [s]}} * 0.6s$$

EXAMPLE: Measurement cycle = 5 s RS 232-Interface
I_{sensor} = 30 mA

$$I_{mean} = 11\ mA + \frac{18\ mA + 30\ mA}{5s} * 0.6s = \text{ca. } 17\ mA$$

From mean power consumption I_{mean}, conclusions can be drawn about the operating life of the storage battery:

$$\text{Operating life} = \frac{\text{Capacity}}{\text{Current}}$$

EXAMPLE: Capacity 5.7 Ah
Current I_{mean} = 17 mA

$$\text{Operating life} = \frac{5.7\ \text{Ah}}{17\ \text{mA}} = 335\ \text{h (ca. 14 days)}$$

2.6.2 QUERY MINUTES

As with QUERY SECONDS, power consumption is composed of a continuously flowing current I_{cont} and a current which only flows together for about 1.6 s for sensor measurement.

The current I_{cont} is lower than comparable current in query seconds by a factor of 20. Thus, query minutes is preferable in storage battery operation.

I_{cont} = 0.6 mA (RS232 / V.24)
= 3 mA (RS422)

The measurement current, in turn, consists of a permanent component I_{query} and a current dependent on the connected sensors I_{sensor}.

I_{query} = 28 mA (RS232 / V.24)
= 50 mA (RS422 connect with Interface Converter HSS 100)

The total current I_{mean} can be calculated as follows:

$$I_{mean} = I_{cont} + \frac{I_{query} + I_{sensor}}{\text{Measurement cycle [min]} * 60\text{s}} * 1.6\text{s} * \text{min}$$

EXAMPLE: Measurement cycle = 1 min RS232-Interface
I_{sensor} = 30 mA

$$I_{mean} = 0.6\ \text{mA} + \frac{28\ \text{mA} + 30\ \text{mA}}{1\ \text{min} * 60\text{s}} * 1.6\text{s} * \text{min} = 2.2\ \text{mA}$$

For the operating life of the storage battery one calculates:

$$\text{Operating life} = \frac{\text{Capacity}}{\text{Current}}$$

EXAMPLE: Capacity 5.7 Ah
Current I_{mean} = 2.2 mA

$$\text{Operating life} = \frac{5.7\ \text{Ah}}{2.2\ \text{mA}} = 2590\ \text{h (108 days)}$$

2.7 MEMORY TIME PERIOD

The storage period is the period of time until the old data are overwritten. The data logger has two ring memories. The time period of the mean value memory depends on the memory cycle set. The time period of the extreme value memory depends on the extreme value cycle set.

2.7.1 MEMORY TIME PERIOD - MEAN VALUE MEMORY

9.1740.0x.xxx (128 KB memory): 1964 data records
9.1740.1x.xxx (256 KB memory): 5892 data records

$$\text{Memory time period} = \frac{\text{Data records}}{1440\ \text{min/day}} * \text{Memory cycle [min]}$$

Example: 256 KB memory
memory cycle = 5 minutes

$$\text{Memory time period} = \frac{5892}{1440\ \text{min/day}} * 5\ \text{min} = 20{,}4\ \text{days}$$

2.7.2 MEMORY TIME PERIOD - EXTREME VALUE MEMORY

Data records: 554

$$\text{Memory time period} = \frac{\text{Data records}}{1440\ \text{min/day}} * \text{Extreme value cycle [min]}$$

EXAMPLE: Extreme value cycle = 60 minutes

$$\text{Memory time period} = \frac{554}{1440\ \text{min/day}} * 60\ \text{min} = 23\ \text{days}$$

2.8 CHANGING THE FUSE

If nothing appears on the display after you have pressed the on-key, this could mean that the fuse (situated above pin 6) has blown. (condition: storage battery not discharged).
To check whether this is the case, open the slide lock (press down and rotate towards the left) and remove the fuse. Check the fuse with a measurement instrument to test the flow of current (a visual check usually does not suffice!).

If the fuse is defective: exchange it for one of a similar type (100 mAT). If the data logger still does not go on: Disconnect all sensor and serial connecting lines. Check the fuse again. If the data logger now switches on, then connect the cable one by one to the sensors until the fuse blows again to pinpoint the defective sensor. Return the defective sensor to the manufacturer for testing.

If the data logger still does not switch on, return it to us for a check.

Please Note: *The blowing of a fuse as a result of a direct or indirect bolt of lightning is a normal protective function.*

3. TECHNICAL SPECIFICATIONS

Case	: stainless steel, rustproof
Type of protection	: IP 65
Power supply	
Internal storage battery	: 12V/ 6,5Ah (lead gel)
Buffer battery	: 3,6V/ 0,75Ah (lithium)
Operating voltage	: 9,0 V...15 V (storage battery connection)
External power supply	: 14...24 V AC / 17...33 V DC
External mains	: 230 V AC (with optional transformer (9.1740.x1..xxx/ 9.1740.x3.xxx)
External solar panel	: 12 V/ 5 W (with optional solar regulator) (9.1740.x2.xxx/ 9.1740..x3.xxx)
Operating life	
Storage battery	: for example measurement cycle 1 min, RS232 interface: nominal 5 months
Operating temperature	: -30...+50°C
Storage temperature	: -40...+70°C
Analog measured values	
A/D converter	:
Resolution	: 10 bit (1024 steps)
Meas. Accuracy	: ± 0,2% of the measurement range
Channels Anal.	: 10 4 x Temperature Pt 100 1 x Radiation transmitter CM3/ CM6B 1 x 0-1V 2 x 0-5 V 2 x 0-10 V/ 0-20mA/ 2-10V/ 4-20 mA

Digital measured values			
Channels	: 4		
	synchronous-serial (wind direction)		
	16 bit counter (wind velocity)		
	8 bit counter (precipitation)		
	8 bit counter + status (leaf moisture)		
Display	: Displays date, time, battery voltage		
	Sensor values in LC-display (2x16 characters)		
Operation	: Setting date, time, Baud rate		
	Station name, measurement, memory and extreme value cycle		
	via 3 keys or via serial interface.		
Time base	: Real time clock with automatic leap year adjustment,		
	Powered by the buffer battery		
	(Accuracy ± 10 ppm = ± 0,9 s/ 24 h (25°C))		
Memory capacity	: 128 KB (9.1740.0x.xxx) (optional 256 KB: 9.1740.1x.xxx)		
	Data contents are secured by the buffer battery.		
Number of data records			
Mean values	: 1964 (128 KB) / 5892 (256 KB)		
Extreme values	: 554		
Measurement cycle	: 1, 2, 3, 4, 5, 6, 10, 12, 15, 20, 30 seconds		
	1, 2, 3, 4, 5, 6, 10, 12, 15, 20, 30, 60 minutes		
Memory cycle/			
Extreme value cycle	: 1, 2, 3, 4, 5, 6, 10, 12, 15, 20, 30, 60 minutes		
Data output	: memory card interface for 256 KB memory cards.		
	Remote-control query over the serial interface		
Serial interface	: XON/ XOFF Flow control		
	300...9600 Baud		
	7 data bits, Even Parity, 1 stop bit		
	9.1740.xx.xx0:		
	RS 232/ V.24 (3-wire, TXD/ RXD/ Gnd)		
	(transmission distance: 15 m)		
	9.1740.xx.xx1:		
	RS 422 (5-wire, TXD+/ TXD-/ RXD+/ RXD-/ Gnd)		
	(transmission distance 1000 m)		
Operation	: 3 keys on the instrument		
	remote-control operation over the serial interface		
LCD display	: 2 lines à 16 characters		
Input resistance			
Sensor inputs	: Special input 3	0...1 V	R = 20 kΩ
	Special input 4/ 5	0...5 V	R = 50 kΩ
	Special input1/ 2	0...10 V	R = 100 kΩ
		0...20 mA	R = 250 Ω

3.1 CONNECTING DIAGRAM

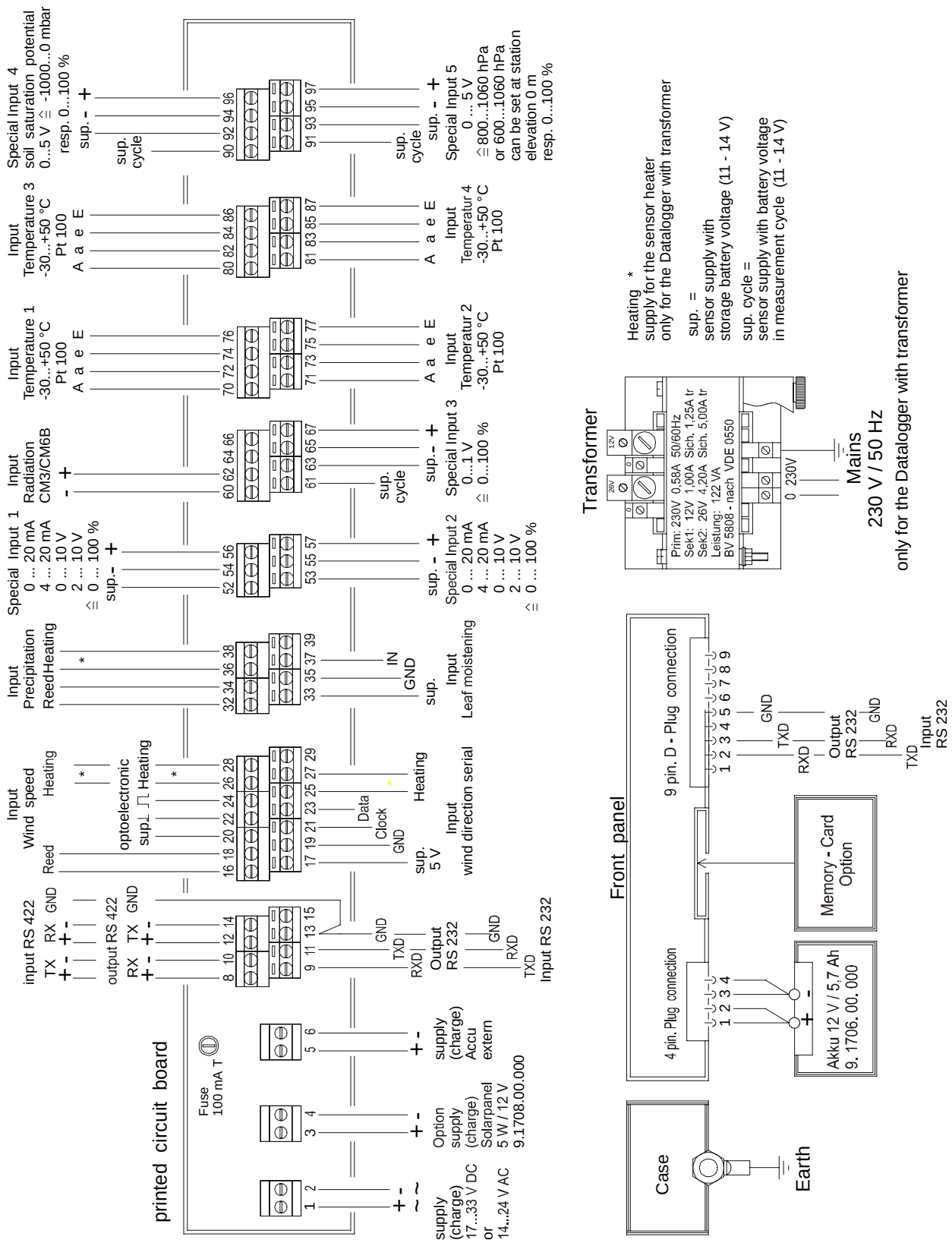

ADOLF THIES GmbH & Co. KG

Hauptstraße 76 37083 Göttingen Germany
P.O. Box 3536 + 3541 37025 Göttingen
Phone ++551 79001-0 Fax ++551 79001-65
www.thiesclima.com info@thiesclima.com