Hygro-Thermometer

Instruction for use 1.0165.42.058 / 1.0169.42.058

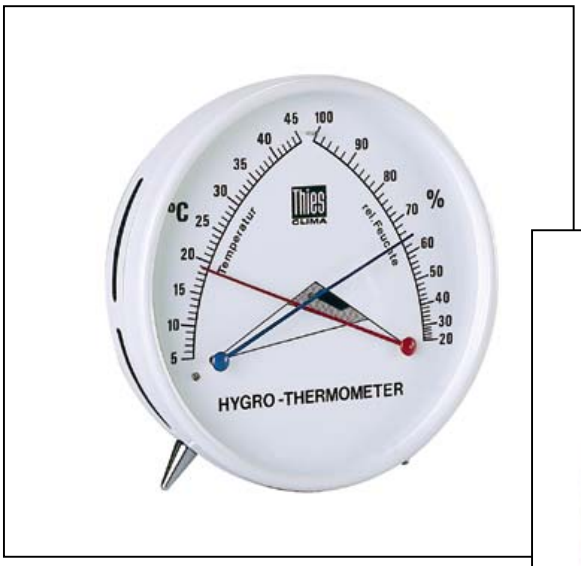

1.0165.42.058
with feet and hook

1.0169.42.058
with flange for installation

General Information

Hygro-thermometers are used to measure the humidity and the temperature of a room climate. In addition to the humidity and temperature scale, this instrument also indicates two different climate zones. The black zone includes all the conditions of the air in a room which correspond to the normal climate as set down in DIN 50014. (German Industrial Standards Code). The larger field with the grid indicates climatic conditions in the room which one would term “comfortable“. “Comfortable“ is defined as the climatic range where people feel well. This area is where the two pointers intersect.

During the measuring period the instruments should not be exposed in direct sunshine or artificial source of heat.

Technical Data

rel. Humidity	Measuring Range:	20 ... 100 %
	Graduation:	2 %
	Max. Measuring Error:	± 3 %
Temperature:	Measuring Range:	5 ... 45 °C
	Graduation:	1 °C
	Max. Measuring Error:	± 1 K
Weight:	450 g	

Scale Drawing

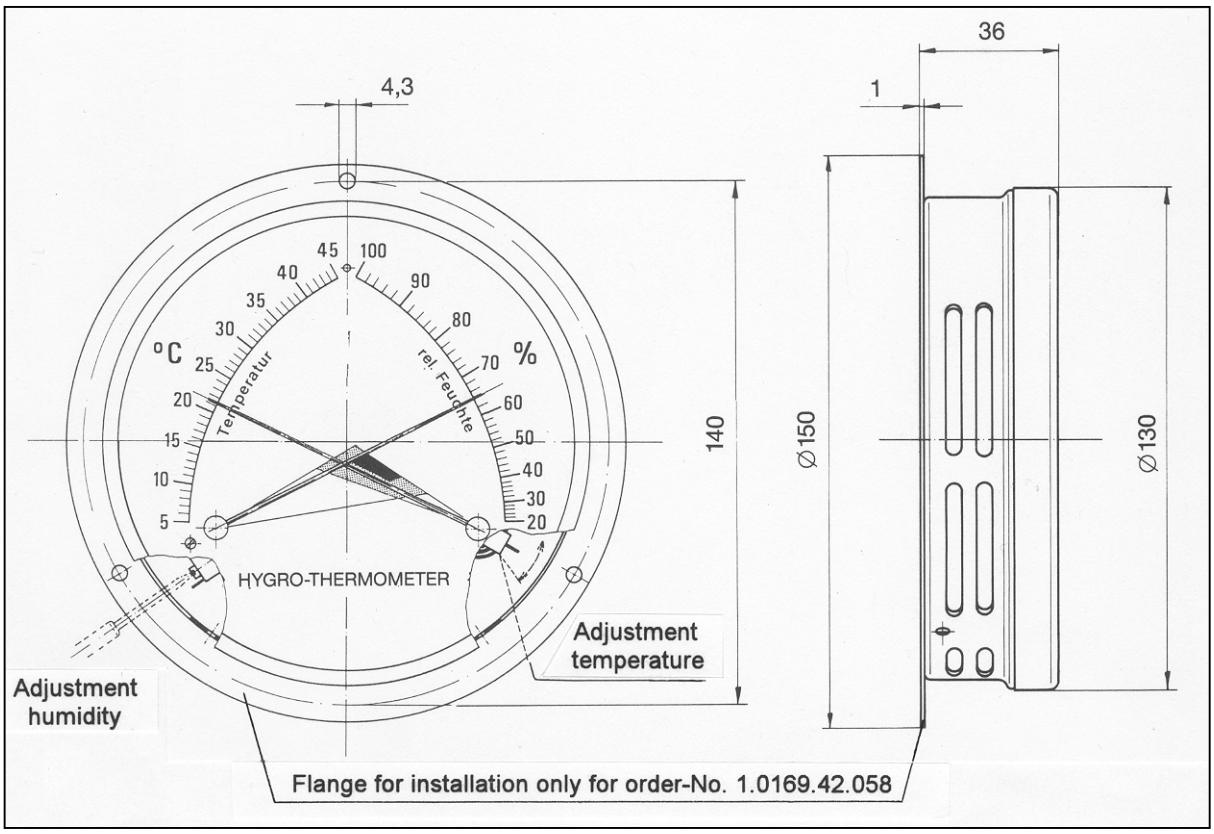

Adjustment

Each instrument is carefully adjusted before delivering. However, should deviations in the indication be determined during a test measurement, the instrument can be readjusted as follows:

The setting screw for relative humidity is visible in a slit on the left-hand side of the case (see illustration). Turning it to the right will raise the blue pointer. The temperature adjustment is situated in al slit on the right hand side of the case. To adjust the temperature, simply shift the brass angle a bit. The red pointer raises when the brass angle is pushed downwards.

ADOLF THIES GmbH & Co. KG
Hauptstraße 76 37083 Göttingen Germany
P.O. Box 3536 + 3541 37025 Göttingen
Phone ++551 79001-0 Fax ++551 79001-65
www.thiesclima.com info@thiesclima.com

- Alterations reserved -