THE WORLD OF WEATHER DATA - THE WORLD OF WEATHER DATA - THE WORLD OF WEATHER DATA

Instruction for Use

021368/06/07

Ultrasonic Anemometer 2D a

4.381x.xx.xxx

from software version V1.42 **Status: 06/2007**

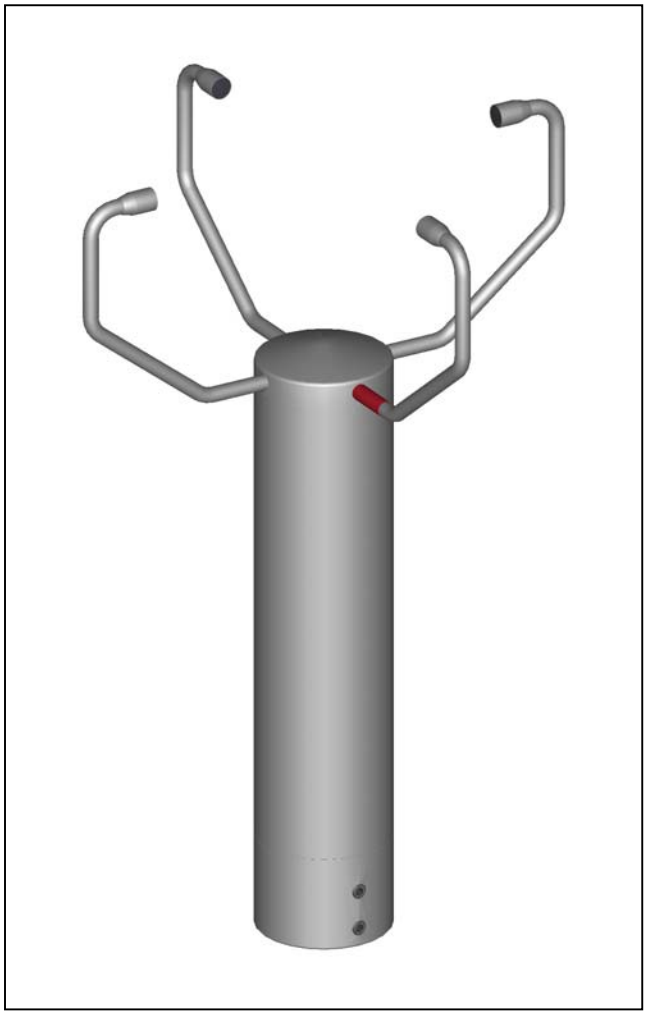

ADOLF THIES GmbH & Co. KG

Hauptstraße 76 37083 Göttingen Germany
Box 3536 + 3541 37025 Göttingen
Phone ++551 79001-0 Fax ++551 79001-65
www.thiesclima.com info@thiesclima.com

Contents

Fig.

Table

1 Application

The **Ultrasonic Anemometer 2D** is used to detect the horizontal components of **wind velocity** and **wind direction** as well as the **virtual temperature** in 2 dimensions.

Due to the measuring principle the instrument is ideal for inertia-free measurement of gusts and peak values.

The level of accuracy achieved when measuring the air temperature (virtual temperature) surpasses that of classical methods, in which the temperature sensors are used with weather and radiation protection, following correction of the influence of damp occurring with certain weather situations.

Output of the measured values can be either digital and / or analogue.

Digital output: An RS485/422 is available for serial communication. It can be operated in full or half-mode. For the output of measured values there are a number of predefined telegrams or a user-defined telegram (e.g. WV, WD, virtual temp., standard deviation, status information, NMEA etc.).

Analogue outputs: Wind velocity and direction are output either as a current or voltage signal. Measuring range scaling of the analogue outputs for WV and WD are possible.

The analogue outputs can be switched as analogue voltage inputs (max. 3). Data is then output only via the serial interface with the user-defined telegram.

The serial or analogue output of the data is either as an instantaneous value or as a sliding mean.

The sensor arms are automatically heated if necessary with critical ambient temperatures. This also ensures functionality with snowfall and sleet and minimises the risk of malfunctions due to icing-up

Due to additional ultrasonic transformer heating systems the models No. 4.381x**.2x**.xxx and 4.381x**.3x**.xxx are particularly suitable for difficult conditions in high mountain areas or other critical measuring locations where heavy snowfall or ice can be expected.

These operating instructions describe all possible applications and settings. **The *Ultrasonic Anemometer 2D* is factory-set**. Identification for the factory setting is via the order No. and "Factory Setting"

Order number and Setting
see supplementary sheet
"Factory Setting"

With these detailed operating instructions and via the serial interface of the Ultrasonic Anemometer 2 D it is possible for customers to change the factory setting or to adjust it to new requirements.

1.1 Mode of operation

The **Ultrasonic Anemometer 2D** consists of 4 ultrasonic transformers, in pairs of two facing each other at a distance of 200 mm. The two resulting measurement paths are vertical to each other. The transformers function both as acoustic transmitters and receivers.
The electronic control system is used to select the respective measurement path and its measuring direction. When a measurement starts, a sequence of 4 individual measurements is performed in all 4 directions of the measurement paths at maximum speed.
The measuring directions (sound propagation directions) rotate clockwise, first from south to north, then from west to east, from north to south and finally from east to west.
The mean values are worked out from the 4 individual measurements of the path directions and used to make further calculations.
The time required for a measuring sequence is approx. 2.5 msec at +20°C at the maximum measuring speed.

2 Measuring principle

2.1 Wind velocity and direction

The speed of propagation of the sound in calm air is superposed by the velocity components of an air flow in the direction of the wind.

A wind velocity component in the propagation direction of the sound supports the speed of propagation; i.e. it increases it while a wind velocity component against the propagation direction reduces the speed of propagation.

The propagation speed resulting from superposition leads to different propagation times of the sound at different wind velocities and directions over a fixed measurement path.

As the speed of sound greatly depends on the temperature of the air, the propagation time of the sound is measured on each of the two measurement paths in **both** directions. This rules out the influence of temperature on the measurement result.

By combining the two measuring paths which are at right angles to each other, the measurement results of the sum and the angle of the wind velocity vector are obtained in the form of rectangular components.

After the rectangular velocity components have been measured, they are then converted to polar coordinates by the μ processor of the anemometer and output as a sum and angle of wind velocity.

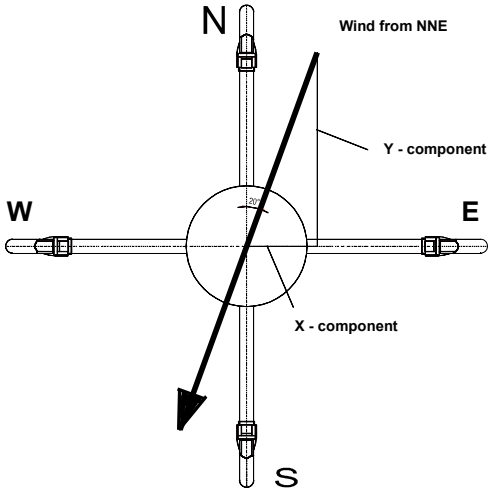

2.2 Acoustic virtual temperature

The thermodynamic interrelationship between the propagation velocity of sound and the absolute temperature of the air is defined by a root function. The sound velocity is also more or less independent of the air pressure and only depends on the absolute air humidity to a minor extent. This physical interrelationship between sound velocity and temperature is ideal when measuring the air temperature as long as the chemical composition is known and constant.
The levels of gases in the atmosphere are constant and with the exception of water vapour content vary at most by a few 100ppm (CO_2) even over lengthy periods.
Determination of gas temperature via its sound velocity is performed directly from measurement of its physical properties without the step of thermal coupling of this gas to a sensor which would otherwise be necessary.
The advantages of this measuring method are firstly its inertia-free reaction to the actual gas temperature, and secondly, the avoidance of measuring errors such as those that occur for example when a solid-state temperature sensor is heated by radiation or cooled through the evaporation of water on the sensor.

Many comparative tests between different weather and thermal radiation shield housings show the indirect effect of the above-mentioned sources of measurement errors on the temperature sensor. [1]
At sites with a high likelihood of icing-up ultrasonic anemometers are also used already as acoustic thermometers, as classical temperature sensors are no longer vented with weather and thermal radiation shield housings after icing-up. Due to the pejorated thermal coupling to the outer world they response only extremely time-delayed, or due to the missing discharge of the own power dissipation the measured temperature is too high.. [2]

Given the dependence, albeit low, of the sound propagation velocity on the air humidity level, the "acoustic virtual temperature" relates to dry air without any water vapour content.
The deviation of the measured "acoustic temperature" from the real air temperature shows linear dependence on the absolute humidity level of the air.
The amount of water vapour in the air proportionately increases the velocity of sound as H_2O molecules only have around half the mass of the other air molecules (O_2 and N_2).
The velocity of sound however only increases with the molar mass fraction of water vapour in the air to a disproportionately low degree.
The reason for this is the lower mean translatory velocity of the water vapour molecules in comparison with the other air molecules. With the more complex H_2O molecules greater degrees of freedom of motion are possible than with the more simple O_2 and N_2 molecules so that the total energy content (temperature) is divided between the possible degrees of freedom of translation and rotation as kinetic energy.
O_2 and N_2 molecules have 3 degrees of freedom of translation and 2 degrees of freedom of rotation, and H_2O molecules 3 degrees of freedom of translation and 3 degrees of freedom of rotation.
The adiabatic exponent γ of each gas is determined by the total number of degrees of freedom according to the following interrelationship:

$$\gamma = 1 + \frac{2}{n}$$

The adiabatic exponents measured for dry air γ_d and water vapour γ_v are:

$$\gamma_d = 1.399463 \text{ and } \gamma_v = 1.331$$

The dependence of the acoustic virtual temperature Tv on the water vapour content of the air can be calculated using the following relationship:

$$Tv = Tt \bullet \left[1 + \left[\frac{\gamma_v}{\gamma_d} - \frac{M_v}{M_d} \right] \bullet \frac{e}{p - \left[1 - \frac{M_v}{M_d} \right] \bullet e} \right] \qquad [1]$$

where Tt is the acoustic virtual temperature of dry air and M_v the molar mass of water vapour, and M_d describes the molar mass of dry air. The ratios $\frac{M_v}{M_d}$ with the value 0.621978 and $\frac{\gamma_v}{\gamma_d}$ with the value 0.95108 can be included in the equation as fixed constants. [3]

The ratio $\frac{e}{p}$ describes the water vapour pressure divided by the air pressure. , corrected by the effect of the water vapour pressure on the air pressure..

The vapour pressure e can be calculated according to the relationship $e = \frac{RH}{100} \bullet e_s$ where RH stands for relative humidity and e_s for saturation vapour pressure.

The saturation vapour pressure is a function of temperature and can be calculated according to the Magnus formula with coefficient according to Sonntag

$$e_s(T) = 6.112hPa \bullet e^{\frac{17.62 \bullet T}{243.12K + T}} \qquad [4]$$

with the temperature of interest where T must be specified in °C.

The following simplified expression with T as the temperature in Kelvin results for calculation of the acoustic virtual temperature measured with humid air:

$$Tv = Tt \bullet \left[1 + 0{,}329102 \bullet \frac{e}{p - [0{,}378022] \bullet e} \right]$$

The correcting effect of the water vapour pressure on the air pressure is relatively low, and is, for ex., approx. 2,8 % with + 40 °C and 100 % relative humidity.

The water vapour pressures to be expected in the nature are clearly below. The error with the simplification of the formalism can consequently almost be neglected.

Simplified formula: $$Tv = Tt \bullet \left[1 + 0{,}329 \bullet \frac{e}{p} \right]$$

Example:

With an air temperature of +20°C, relative humidity of 100% and an air pressure of 1000hPa an acoustic virtual temperature of 22.25°C is calculated from the sound velocity.
The acoustic virtual temperature is therefore 2.25°C above the actual air temperature and can be corrected accordingly using the above equation if the humidity level of the air is known, e.g. relative humidity and the air pressure.

Calibrated measurements performed in the climatic exposure test cabinet with different temperatures as parameters and relative humidity levels between 10% and 90% have shown that the factor in the above equation should be nearer 0.30.

$$Tv = Tt \bullet \left[1 + 0.30 \bullet \frac{e}{p} \right]$$

If required to improve accuracy of the calculated real air temperature, one or more iteration steps could be performed to determine the accurate saturation vapour pressure when using the measured relative humidity and the measured acoustic temperature as corrective variables as the real air temperature (corrected acoustic virtual-temperature) is necessary for the calculation of the saturation vapour pressure.

References:

[1] Lanzinger, Eckhard (Deutscher Wetterdienst), Langmack, Hans (Universität Hamburg): Measuring air temperature by using an ultrasonic anemometer

[2] Musa, Mark (Meteo Swiss), Tammelin, Bengt (Finnish Meteorological Institute) et al.: Measurement of temperature with wind sensors during severe winter conditions

[3] Aspiration-Psychrometer tables, Deutscher Wetterdienst, 7. edition

[4] Coefficient of the Magnus formula acc. to Prof. Dr. Sonntag

3 Preparation for operation

Achtung:

The working position of the anemometer is vertical (sensor arms "above".
During installation, de-installation, transport or maintenance of the anemometer it must be ensured that no water gets into the shaft and connector or cable gland of the anemometer.
When using a lightning rod it must be borne in mind that it should always be installed less than 45° to a measurement path; otherwise there will be deviations in the measured values.

3.1 Selection of installation site

As described above, the ultrasonic anemometer transmits sound packages required to measure the propagation speed. If these **sound packages** meet surfaces that reflect sound well, they are thrown back as an **echo** and can may result in **incorrect measurements** under unfavourable conditions.

It is therefore advisable to install the ultrasonic anemometer at a **minimum distance of 1 metre to objects in the measuring level**.

In general, wind meters should register wind conditions over a wide area. To obtain comparable values when measuring the ground wind, measurement should be performed at a height of 10 metres above even and undisrupted terrain. Undisrupted terrain means that the distance between the wind transmitter and the obstruction should be at least ten times the height of the obstruction (s. VDI 3786). If it is not possible to comply with this provision, the wind meter should be installed at a height at which measured values are influenced by obstructions located in the vicinity to the least possible extent (approx. 6-10 m above the interference level). On flat roofs the anemometer should be installed in the middle of the roof and not at the edge to thus avoid any preferential directions.

3.2 Installation of anemometer

Proper installation of the ultrasonic anemometer is carried out using a tube socket R1½" (Ø 48.3 mm) and 50 mm in length. The inside diameter of the pipe socket must be at least 40 mm as the ultrasonic anemometer is electrically connected from below. After connection the ultrasonic anemometer is fitted on the tube or mast socket. The arm of the sonic transformer marked red must be aligned to north. This allows a bearing to be taken from an object located to the north, e.g. a building or special geographical feature, using the sonic transformers of the north / south measurement path.
The instrument is fixed to the shaft with the four Allen screws (SW 4 mm).

3.3 Alignment to north

To align the anemometer, the **arm of the sonic transformer marked red must point to north** (true north). To do so, select a conspicuous feature of the landscape to the north or south with a compass and turn the mast or anemometer until the opposing arms are aligned in this direction. The user can also position himself to the north or south at an appropriate distance while another person turns the anemometer or mast as commanded until the relevant pair of sensor arms are aligned.
It is recommended using a telescope for this process.
When aligning the instrument to north using a compass, the magnetic variation (= deviation in direction of compass needle from true north) and local magnetic fields (e.g. iron parts, electric cables).

Attention:

If an additonal north marking* (N) *is attached on the sensor head (see figure), it is overriding for the north alignment

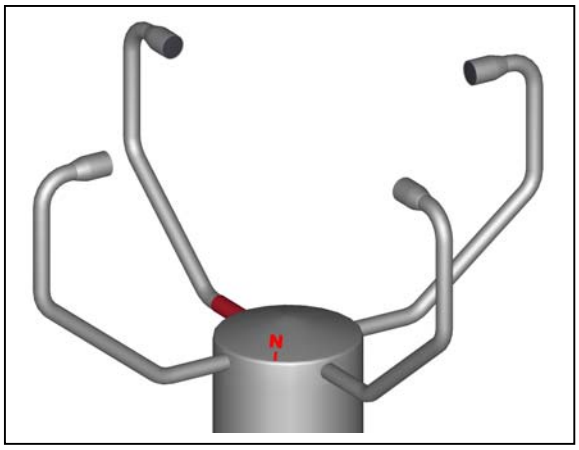

3.4 Electrical Installation for Ultrasonic Anemometer with Connector

The ultrasonic anemometer is equipped with a plug for electrical connection. A coupling socket (mating) is included in delivery. It is located in the lower part of the transport packing.

3.4.1 Cables, Cable preparation, Connector Installation

For pin assignment please refer to supplement „factory settings“. Examples see chapter 3.4.2.

The cable must have the following properties:
8 cores; 0,5 to 0,75 mm² core cross-section for supply ; min. 0,14 mm² core cross-section for data communications ; 7- 8 mm cable diameter, resistant to ultraviolet rays, overall shielding.

Remark:

Optionally, a completely converted connecting cable can be included in delivery for the ultrasonic-anemometer (see accessories).

Coupling socket 507550 (Binder, Serial 423), EMC with cable clamp

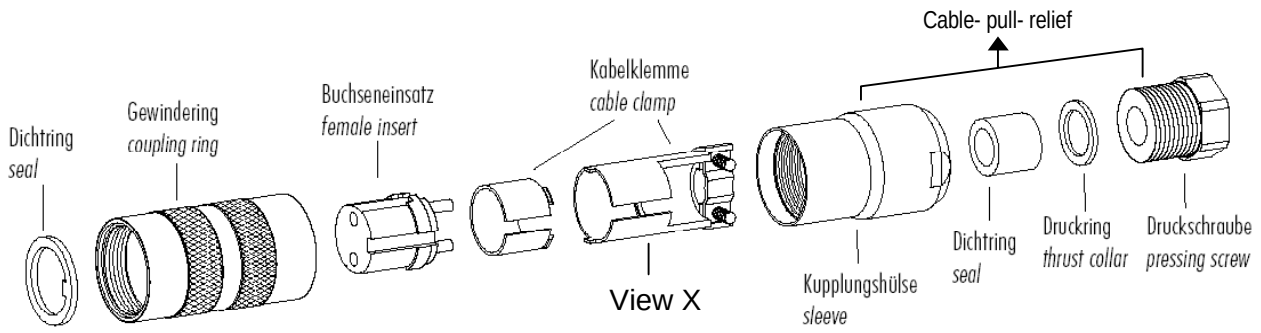

1. Stringing parts on cable acc. to plan given above.
2. Stripping cable sheath 20 mm
   Cutting uncovered shield 15 mm
   Stripping wire 5mm.

   Cable mounting 1
   Putting shrink hose or insolating tape between wire and shield.

   Cable mounting 2
   If cable diameter permits, put the shield backward on the cable sheath.
3. Soldering wire to the insert, positioning shield in cable clamp.
4. Screwing-on cable clamp.
5. Assembling remaining parts acc. to upper plan.
6. Tightening pull-relief of cable by screw-wrench (SW16 und 17).

Cable mounting 1

Viev X

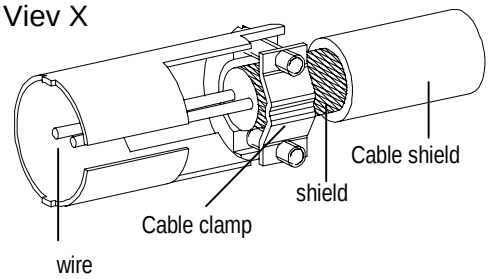

Cable mounting 2

Viev X

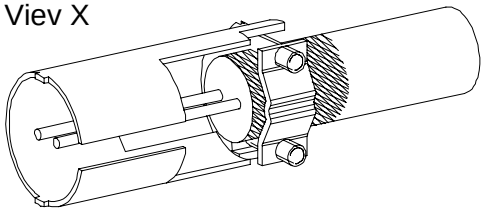

Fig. 1: Connector installation

3.4.2 Connector Pin Assignment (Examples of Function)

Remark

- For exact allocation of function please refer to supplement "Factory Settings"
- The pins 1 – 6 (incl.) are galvanically isolated from the supply voltage and from housing.

• Serial Interface, Full-duplex			View of solder terminal of coupling socket
Pin	**Allocation**	**Function**	
1	RXD-	Serial interface	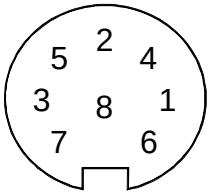
2	TXD-	Serial interface	
3	ADIO	Function not preset	
4	RXD+	Serial interface	
5	TXD+	Serial interface	
6	AGND	Analogue ground	
7	12-24V AC/DC	Voltage supply	
8	12-24V AC/DC	Voltage supply	
⏚	Shield		

• Serial Interface, halve-duplex and analogue outputs			View of solder terminal of coupling socket
Pin	**allocation**	**Function**	
1	WG	Analogue output wind speed	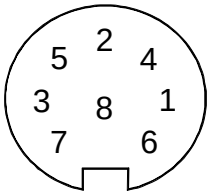
2	TXD- / RXD-	Serial interface	
3	ADIO	Function not preset	
4	WR	Analogue output wind direction	
5	TXD+ / RXD+	Serial interface	
6	AGND	Analogue ground	
7	12-24V AC/DC	Voltage supply	
8	12-24V AC/DC	Voltage supply	
⏚	Shield		

• Serial Interface, halve-duplex and analogue inputs			View of solder terminal of coupling socket
Pin	**Allocation**	**Function**	
1	0-9,96V	Analogue input	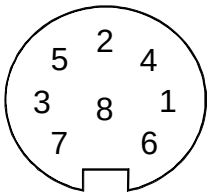
2	TXD- / RXD-	Serial interface	
3	0-9,96V	Analogue input	
4	0-9,96V	Analogue input	
5	TXD+ / RXD+	Serial interface	
6	AGND	Analogue ground	
7	12-24V AC/DC	Voltage supply	
8	12-24V AC/DC	Voltage supply	
⏚	Shield		

3.5 Electrical Installation for Ultrasonic Anemometer with Screwed Cable Gland

The ultrasonic anemometer is equipped with a connected cable by means of a screwed cable gland. The cable end is open. The core ends are marked by means of cable rings.

3.5.1 Cable Pin Assignment (Examples of function)

Remark:

- For exact allocation of function please refer to supplement "Factory Settings"
- The pins 1 – 6 (incl.) are galvanically isolated from the supply voltage and from housing.

- **Cable assignment:**
  Analogue outputs, serial interface halve-duplex

Pin	Colour Code	Assignment	Function
1	white	WG	Analogue output wind speed
2	green	TXD- / RXD-	Serial interface
3	black 1	ADIO	Heating control
4	brown	WR	Analogue output wind direction
5	yellow	TXD+ / RXD+	Serial interface
6	black 2	AGND	Ground for analogue output and serial interface
7	black 3	12-24V AC/DC	Voltage supply
8	black 4	12-24V AC/DC	Voltage supply
⏚	green / yellow	shield	

4 Maintenance

As the instrument does not have moving parts, i.e. is not subject to wear during operation, only minimal servicing is required. Given that the sensor surfaces are normally kept clean by rain, it will only be necessary to occasionally remove residues from the sensor surfaces in regions with very little rain. Cleaning can be carried out as required using non-aggressive cleaning agents in water and a soft cloth during routine checks.

Attention:

During storage, installation, de-installation, transport or maintenance of the anemometer it must be ensured that no water gets into the shaft and connector or cable gland of the anemometer.

5 Calibration

The ultrasonic anemometer does not contain any adjustable components such as electrical or mechanical trimming elements. All components and materials used show invariant behaviour in terms of time. This means that no regular calibration is required due to ageing. Errors in measured values are only caused by mechanical deformation of the transformer arms and associated changes in measurement path lengths.

The virtual temperature can be used to check the measurement path length. A change of 0.17% in the measurement path length and thus a measuring error of 0.17% for the wind velocity corresponds to a deviation in the virtual temperature of 1 K at 20°C; there is a measuring error of approx. 1% for the wind velocity with a 6 K temperature deviation.

In the event of any change in the measurement paths of the anemometer the manufacturer should be consulted regarding recalibration.

Important:

Mechanical deformation of the measuring arms results in errors in the measured values, which involve the output of error telegrams / error signals to the analog interfaces.

6 Warranty

Damage caused by improper handling or external influences, e.g. lightning, do not fall under the warranty provisions. The warranty entitlement expires if the instrument is opened.

Important:

The ultrasonic anemometer must be returned in the original packaging as the warranty entitlement otherwise expires with mechanical damage, e.g. deformation of measuring arms.

7 Functional description

The functioning of the ULTRASONIC instrument is described below. Due to the internal structure certain functions depend on other functions. Such dependency is described in each case. For example, in half duplex mode independent telegram output is not permissible. There are also restrictions regarding the functional definition of the cable connector. This is due to the double assignment of individual PINs.

7.1 Serial communication

The ULTRASONIC provides an RS485 interface for serial communication. It can be operated either in full or half duplex mode and at different baud rates.
A standard terminal program is used for communication with the ULTRASONIC. With a Windows-based operating system Hyper Terminal is included in the scope of supply. It has to be installed subsequently if required.

The ULTRASONIC does not contain any pull-up or pull-down resistors or a wave terminating resistor.

When starting the ULTRASONIC, the communications parameters are output to the serial interface. Output takes place at 9600.8N1. The baud rate, the duplex modus and the ID are output:

Example:
THIES ULTRASONIC
!00BR00005
!00DM00001

The ULTRASONIC starts with ID 0, with a baud rate of 9600.8N1 and full duplex mode.

7.1.1 Duplex mode

Duplex mode decides the type of physical connection. In full duplex mode the send and receive signals are each transmitted via separate pairs of cables. This means it is possible to send and receive signals as required.
In half duplex mode transmission of the send and receive signals is via the same pair of cables: see **Command DM**.

For the ULTRASONIC there are restrictions on the parameter combination or function of the terminals depending on the transmission type selected. Due to the limited number of connector contacts multiple assignment of the connections are necessary. The following table shows the functional options for the modes full and half duplex.

Full duplex mode	Half duplex mode
Independent telegram output possible (see Command TT)	Independent telegram output not possible
Bus mode not possible	Bus mode possible
No output of analog wind velocity (WV) and wind direction (WD)	Output of analog wind direction (WD) and wind velocity (WV) possible
No readin of ID from external PINs (see **Command XI**)	Readin of ID from external PINs possible (see **Command XI**)
Analog inputs to PINs WV/RXD- and WD/RXD+ not possible. (see **Command *AA*, Command AB**)	Analog inputs to PINs WV/RXD- and WD/RXD+ possible (see **Command *AA***, **Command AB**)

Table 1: Restrictions in full and half duplex mode

7.1.2 Response Delay

With the serial communication please take into consideration that the ULTRASONIC responds immediately to arriving telegrams. The response time of the instrument is in the lower range of milliseconds. Possibly, the delay between receiving signal and sending signal might be too short for some interface converters. It is possible that,, within this time period, the interface converter has not yet switched over from the mode 'sending' to the mode 'receiving'. This might lead to absurd telegrams.
In order to avoid this effect, the ULTRASONIC has the parameter RD (response delay). With this parameter the response is additionally delayed, on receipt, by the selected value in milliseconds.

7.1.3 General telegram structure

For serial communication the ULTRASONIC has a fixed telegram format which also permits communication in bus mode. It has the following form:

NNBB<cr> <cr> stands for Carriage return (Enter key)

for a data enquiry or

NNBBPPPPP<cr> <cr> stands for Carriage return (Enter key)

for a parameter change.

The individual letters have the following meaning:

NN:	Two-position ID of the ULTRASONIC. It can be selected in the range from 00 to 99. The presetting is the ID '00': see also **Command ID** and **Command XI**
BB:	Two-position command. A complete list can be found in section Command list.
PPPPP:	If a new parameter is to be set, the parameter is changed with a 5-position value. The parameter is always right-justified; i.e. it thus has to be padded from the left with zeros. Example: Telegram No. 4 is to be interrogated. The relevant command is: 00TR00004<cr> <cr> stands for Carriage return (Enter key) The prerequisite is that the ULTRASONIC ID has the value '0'.

Example:

With the command

00BR<cr> <cr> stands for Carriage return (Enter key)

the selected data record for the baud rate is returned.

!00BR00005

Remark:

The receiving buffer of the ULTRASONIC can be cleared by sending a carriage return <CR>. If the ULTRASONIC possibly has invalid characters in the receiving buffer, this buffer can be processed by sending a carriage return. In this case, it is advisable to send a carriage return at the beginning of the telegram, for example:

<cr>00BR<cr> <cr> stands for Carriage return (Enter key)

7.1.4 Return values of ULTRASONIC

After a valid command has been input, the ULTRASONIC sends acknowledgement, e.g. acceptance of the parameter or output of a data telegram.

For a standard command the response starts with a '!', followed by the ID and the parameter value.

If the input command is TR or TT, the ULTRASONIC transmits a data telegram as the response .

If the command cannot be processed for a certain reason, the instrument transmits a telegram with the error code 'CE' (Command Error). The meanings of the values for CE are summarised in '**Table 2: Return values with incorrect interpretation of command'** :

Value output in CE telegram	Meaning
8	Incorrect access mode
16	Parameter not in valid range
4 or 32	Violation regarding parameters of other commands

Table 2: Return values with incorrect interpretation of command

7.1.5 Access Mode

For configuration the ULTRASONIC has a set of commands which determine behaviour in terms of the propagation time. The commands are broken down into three levels:

- Enquiry Mode
- User mode
- Configuration mode

Enquiry mode:
This mode comprises commands which do not influence the parameters of the ULTRASONIC. They include for example, output of the system status and interrogation of the data telegram with TR.

User mode:
This mode comprises commands which alter the behaviour of the ULTRASONIC. These parameters can be changed by the user. The system behaviour of the instrument is altered with these commands. This group of commands includes e.g. settings for data transmission and averaging

Configuration mode
This mode comprises commands which were set when adjustment of the instrument was performed at the factory. They can be equated with calibration. These parameters must not be changed.

To distinguish between commands of the three groups when parameterising the ULTRASONIC the instrument is equipped with an access key KY. Inputting of the key accesses the individual levels. Access to commands at a higher level includes access to commands at a lower level.

Access key	Response from ULTRASONIC	Command level
00KY00000	WRITE PROTECTED !00KY00000	Enquiry mode (preset)
00KY00001	USER ACCESS !00KY00001	User mode
00KY00234	CONFIG ACCESS !00KY00234	Configuration mode

Table 3: Access key for different command levels

After the access key has been changed, the ULTRASONIC transmits a response which contains not only the parameter input but also the access mode.

After parameters have been changed with the key '00001' or '00234', the ULTRASONIC must be reset to the initial position with the command 00KY00000.

Example:
00KY00001
USER ACCESS Response from ULTRASONIC
!00KY00001 Response from ULTRASONIC
00AV00005 Change in averaging time
00KY00000
WRITE PROTECTEDResponse from ULTRASONIC
!00KY00000 Response from ULTRASONIC

7.1.6 Baud rate

The baud rate is used to select the transmission speed via the RS485. The parameter range is from 1200 baud to 921.6 kBaud.
To prevent accidental reprogramming of the baud rate over 115.2kBaud, the baud rates above 115.2kBaud are accessed with the command BX.
Reprogramming of the baud rate with the command BR has an immediate effect on the ULTRASONIC. After the dispatch of a command, the user program used must be set to the corresponding baud rate.
When using a baud rate in the extended range (230400baud .. 921600baud) the ULTRASONIC includes an additional safety mechanism which prevents unintentional adjustment of the baud rate. When the command BX is used, the ULTRASONIC immediately switches over its baud rate but does not store this change. With each restart the ULTRASONIC starts with the old baud rate. To store the changes the baud rate of the PC must be set to the new speed, and the same command transmitted to the ULTRASONIC once again. After transmission the ULTRASONIC acknowledges the command with the output 'Baud rate saved'.

Example:
The baud rate is to be changed to 962100baud:

Command:	Response ULTRASONIC	Comment
00KY00001	USER ACCESS !00KY00001	Permit access
00BX00103	For saving change baud rate and insert command again	
		Change baud rate of PC to 921600 here
00BX00103	Baud rate saved !00BX00103	

7.1.7 Instrument ID

The instrument ID specifies the address to which the ULTRASONIC is to respond during serial communication. The instrument ID lies in the range from '00' to '99'. The preset ID is '00'. Every telegram from the ULTRASONIC starts with the ID set. Under certain conditions this provides for bus mode: see Bus mode.
The ID is reprogrammed with the command 'ID'. The new ID of the ULTRASONIC is specified as the parameter. After the change has been made, the ULTRASONIC immediately responds to the new address.

Example:
00KY00001

USER ACCESS	Response from ULTRASONIC
!00KY00001	Response from ULTRASONIC
00ID00004	ID changed to address 4
!04ID00004	ULTRASONIC confirms new ID The ULTRASONIC responds to the new ID '04' now, i.e. including after a restart
04AV	Interrogation of averaging time with new ID
!04AV00005	Return of averaging time

It is also possible to specify the ID on start-up via the external PINs WV/RXD- , WD/RXD+ and ADIO. For this purpose the parameters of the commands AA, AB, AC and XI must be set properly: see **Command *AA***, **Command AB**, **Command AC**, **Command XI**.

7.1.8 Bus mode

The concept of ID-based communication allows the ULTRASONICs to be operated in a bus system. The prerequisites for this are:

- half duplex mode
- different IDs of the individual bus users
- master-slave structure, i.e. there is a device in the bus (control, PC ...) that performs cyclic enquiry of the data of the individual ULTRASONICs and possibly parameterises the ULTRASONICs.

In bus mode there are no restrictions on parameterisability and program upload. A station can also be provided with a new program in bus mode for a specific purpose. With an update a program update must be performed for every ULTRASONIC.

In bus mode it is recommended not using an ULTRASONIC with the ID '00' as this ID is reserved for devices that are integrated in the bus for the first time.

7.2 Analogue and digital I/O

In addition to output of the data via the serial RS485, the ULTRASONIC can also output the data using an analogue interface. These outputs can also be optionally switched as analogue inputs which read in an external voltage of 0.. 9.96V, perform digital conversion and output this via the user-specific telegram.
The ULTRASONIC is also equipped with the cable ADIO, which includes digital output functions in addition to the analogue input.

7.2.1 Analog inputs

The signals WV/RXD-, WD/RXD+ and ADIO of the connector can be switched as analogue inputs under certain conditions. WV/RXD- and WV/RXD+ are then only available as inputs when half duplex mode is selected and the ports have been set accordingly via the commands AA, AB and AC.
See **Command AA Command AB Command AC**.
The function of the pin ADIO is independent of duplex mode and can be switched as an analogue input at any time.
The measured values read-in can be output with the user-specific telegram: see User-specific telegram. The input voltage range is 0..9.96V, while the sampling rate per channel is 100ms +100ms for the reference voltage. If for example all three channels are configured as analogue inputs, the sampling frequency per channel is 1/400ms = 2.5Hz.

From software version V1.38

The scanning rate can be changed through the command AU. The parameter gives the scanning interval in ms. The scanning rate for all analogue channels is the value of AU, multiplied by the number of channels.

The parameters AY,AZ; BY,BZ; CY,CZ are available for the scaled output of the analogue measuring values. By means of these parameters the measuring range (0..9,96V) can be converted into a linear output.
The Y-parameters always state the value corresponding to 0V, the Z-parameters state the value corresponding to 9,96 V. As the command interpreter of the ULTRASONIC facilitates no negative numbers and no commas the scaling values must be converted before input. The formula for the conversion is as follows:

Command value = 30000+(measuring value*10)

Example:
A temperature sensor is to be connected to PIN ADIO. The sensor has the following characteristics:
0V -> -40°C
9,96V -> 80°C

The parameter CY describes the measuring value for 0V. It is to be calculated as follows:
Command value = 30000 +(-40*10) = 29600
Through the command 00CY29600 the lower value is described.

The parameter CZ describes the measuring value for 9,96V. The value is to be scaled to +80°C. The conversion is as follows:
Command value = 30000+(80*10) = 30800
Through the command 00CZ30800 the upper value is scaled.

For the output of the data values the user-defined telegram is applied. If the measuring value of the ADIO-PIN shall be output with sign, two pre-dots, and one post-dot sign the definition
00UT@33,05,1,1@
must be added. See also **7.4.5 User-specific telegram**

For further information see
Command AA, Command AB, Command AC, Command AY, Command AZ, Command BY, Command BZ, Command CZ

7.2.2 Analogue outputs

As an additional option the analogue outputs WV/RXD- and WD/RXD+ offer the possibility of outputting the wind velocity and wind direction as analogue values both as a voltage and current value. It is also possible to select whether a constant offset of 20% of the end of the measuring range is output with the current or voltage output. This provides for the interfaces 4..20mA or 2..10V. See the table for the possible combinations

	Parameter SC=0	Parameter SC=1
Parameter AN=0	0..10V	2..10V
Parameter AN=1	0..20mA	4..20mA
Parameter AN=2	No output	No output

P AA= 0; AB = 0

Table 4: Config. of analog outputs WV/RXD- and WD/RXD+ with parameters AN and SC

7.2.3 Scaling of analog wind velocity

With the analog wind velocity the user has the option of specifying the velocity for the terminal value of the measuring range with the command AR. In the preset value the scaling is 0..60m/s: see **Command AR**.
The terminal scaling value is specified in m/s. For example the command 00AR00030 scales the analog output range of 0..30m/s wind velocity. With a setting of 2..10V this results in the following:

WV =0m/s -> 2V and
WV=30m/s -> 10V

See also **Command AR**.

7.2.4 Scaling of analog wind direction

The ULTRASONIC offers additional formatting options for output of the analog wind direction. Firstly the wind direction can be corrected with a constant offset, and secondly the instrument allows the wind direction to be output via a range of 0..360°, 0..540° and 0..720°. The last two modes are used when compatibility of the indicating device is required.

7.2.5 Correction to north

The command NC is used to select the correction to north in degrees. This value is always added to the measured angle internally in the instrument. If the resulting value is greater than 360°, 360° is subtracted from the corrected angle value. The setting is then used when the ULTRASONIC with its north sensor is not directly aligned to north. This is sensible when there is a preferential wind direction and the interference affecting the sensor arms in the measurement path is to be minimised, e.g. with wind turbines.
Also see here **Command NC**.

360°

The output value of the angle of 0..360° at the analog interface is the presetting. In this mode the value at the analog interface then always 'jumps' between Minimum and Maximum when the wind direction changes between 1° and 360°.
See also **Command AO**.

540°

With the setting 0..540° uncontrolled jumping is avoided with unsteadiness (0°). Here the unsteadiness is located at 540°. If the angle > 540°, a single jump to 180° takes place (540°-360° = 180).

Measured value output	Assigned wind direction
0°	West
90°	North
180°	East
270°	South
360°	West
450°	North
540°	East

Table 5: Assignment of wind direction with 0-540° angle range (as per VDI 3786 sheet 2)

Note: When there is no wind, "north" is always output.
See also **Command AO**.

720°

Another possible setting is scaling of 0..720°. As for 0..540° the unsteadiness is avoided at 360°. A jump to 360° only takes place when the limit of 360° (> 720°) is exceeded for the second time.
It should be noted that an output of 0..720° the value 0° means a southerly wind.
See also **Command AO**.

7.3 Data acquisition

The main function of the ULTRASONIC firmware is data acquisition and preparation. For data acquisition sound impulses are transmitted by the sensors in a clockwise direction and received by the sensor opposite. The propagation time measured is a measure of the velocity. A measuring cycle is complete when every sensor has performed transmit and receive once. The complete data record is then time-stamped and passed on to the next level. After the plausibility check the individual components are calculated and, depending on the setting, either output (see **7.3.1 Instantaneous *values***) or written to the averaging buffer (see averaging) prepared and output.

For a resulting wind velocity < 0.1m/s the wind direction and wind velocity are set to zero. The wind direction 0° is reserved for no wind. If the wind direction is equal to zero with WV > 0.1m/s, the interface outputs 360°.

For this criterion the last valid instantaneous value of the wind speed is generally used as initial value.

7.3.1 Instantaneous values and output of raw measured values

The output of instantaneous values is generally a special case. Due to the high acquisition speed for the measured values averaging of the data is sensible in most cases. If instantaneous values are to be output, averaging must not be switched on. The parameter AV should be set to '0': see **Command AV**.
The OR parameter is used to adjust the output rate with independent output. With a value of '0' a telegram is output whenever a new measured value is determined. If the baud rate is set high enough and a short user-specific telegram is defined in this mode, the raw measured values of the ULTRASONIC can be output.

Note:
The user-specific telegram contains a data value 'measured value counter' (index 15), which is incremented with every new measured value. If the difference of the measured value counter between two output telegrams is one, every measured value is output. In the standard setting the acquisition of measured values takes place every 20ms.
To raise the acquisition of measured values to a maximum level (a new measured value approx. every 2.5ms), the following steps must be performed:

Switch off plausibility	00PC00000
Set measuring delay to zero:	00MD00000
Automatic measuring adjustment off:	00MA00000

All measured values of the ULTRASONIC can now be output if the high baud rate is high enough. It is recommended creating a user-specific telegram and having it independently output by the ULTRASONIC (00TT00006). The data field Time stamp (index 5 in user-defined telegram) shows the time of the measured value relative to system start-up in ms.

7.3.2 Averaging

Given the high data acquisition rate averaging is to be recommended in most cases. The averaging period is freely selectable from 600ms to 100 minutes within wide limits. See also '**Table 8: Adjustment of averaging periods with parameter AV** under '**Command AV**'.
It is a basic rule that only valid values are written to the averaging puffer. The size of the buffer is not determined by the number of data records but by the difference in the time stamp between the first and last data record. As a result any missing measured values do not influence the averaging result. The content level of the averaging buffer is shown in the status value of the ULTRASONIC. It is the ratio between the memory actually occupied and the maximum required memory (calculated value). Output is performed in eight or 16 steps: see Status information.

The Ultrasonic 2D incorporates two different practical procedures for averaging:

- one **procedure for generating vectorial mean values** and
- one **procedure for generating scalar mean values**

These different procedures can be selected for averaging wind velocity as well as wind direction depending on the actual application.

Vectorial averaging involves the wind direction for averaging of the wind velocity, and wind velocity for averaging of the wind direction.
Both averaged variables, wind velocity and wind direction, thus each undergo evaluation with the other measured variable.
This averaging procedure is very suitable e.g. for measuring and evaluating the propagation of pollutants.
Scalar averaging averages both variables, wind velocity and wind direction, independently of each other.
This averaging procedure leads to comparable results with mechanical wind velocity and wind direction pickups.
The scalar averaging procedure is suitable e.g. for location analysis for wind turbines where only the wind vector variable relevant for the generation of energy is of interest and not its direction.
The vectorial and scalar procedure can be used within one output telegram independently of the wind velocity and wind direction.
For this purpose one of the four possible combinations is selected using the Command **AM** as for **Average Method**.

Command for selection of averaging procedure:
AM00000 (Average Method) Vectorial averaging of velocity and direction
AM00001 Scalar averaging of velocity and direction
AM00002 Scalar averaging of velocity and vectorial averaging of direction
AM00003 Vectorial averaging of velocity and scalar averaging of direction

7.3.3 Standard deviation

Calculation of the standard deviation is another feature offered by the ULTRASONIC. The standard deviation values are determined for the wind velocity, wind direction and virtual temperatures with an averaging time > 1sec. Values are calculated according to the following formula:

$$Y = \sqrt{\frac{1}{n}\sum_{i=0}^{i<n}\left(\overline{M} - Xi\right)^2} \qquad \text{where} \quad \overline{M} = \frac{1}{n}\sum_{i=0}^{i<n} Xi$$

Standard deviation is switched on with the command "DE00001". When using standard deviation the averaging memory used is limited to 2000 measured values. Otherwise there are no restrictions when using standard deviation. Which calculated values are available when using standard deviation can be found under Available measured values and Data formats in the section User-specific telegram.

In the presetting calculation of the values for standard deviation is switched off. It must be switched on explicitly with the command 00DE00001.

7.3.4 Gust Acquisition

With preset averaging the ULTRASONIC acquires mean values of wind velocity and wind direction. It is expedient, with some application, to output the maximum wind velocity within the mean value period and the respective wind direction..

From software version V1.42 this function is supported. The maximum wind velocity in the mean value buffer is acquired through the command GU (‘gust’) . The length of gust is set in 100ms increments through the parameter of the command GU. It ranges from 100m to 3 sec. The parameter value 0 deactivates the gust measurement.

Exmaple

00GU00010	Activates the gust acquisition. The length of gust I 1 second.
00GU00000	Deactivates the gust measurement.

The measurement values of the gust can be output only by means of the user-specific telegram. see **7.4.5 User-specific telegram**.

Example:

00AV00003	one minute averaging
00GU00030	Length of gust is 3 seconds (WMO-recommendation for gust length)

00UT\02@08,04,01@ @09,03@ @12,05,01,01@ @38,04,01@ @39,03@ @27,02,02@*@36,01,27,02,02@\0D\03

User-specific protocol. Query through TR00006 or TT00006

VDT-telegram plus gust

(STX) WV WD VT WV_gust WD_gust status*check sum(CR)(ETX)

00UT00002	storing of the user-specific telegram
00TT00006	automatic output of the data telegram

The measurement values of the gusts have the following characteristic:

- The preset time for the gust must be less than the preset averaging period.
  See **Command AV**
- If the period of the mean values is less than or even the period of gust, zero is output for the wind velocity and wind direction of the gust.
- In case the wind velocity of the gust is < 0,1 m/s, 0 is output for the wind direction.
- If the calculated wind direction is 0, it is set to 360.

7.4 Serial data output

The transmission of data via the RS485 interface is known as serial data output. Two modes are available for data transmission:

- independent transmission of data
- transmission of data via interrogation telegram

Independent transmission of the data is selected using the command 00TT000XX, with XX standing for the relevant telegram number. In this case the ULTRASONIC transmits its data cyclically in the interval selected with the parameter OR.

7.4.1 Data enquiry

The command TR is used for data enquiry via the ULTRASONIC. The command has no access protection. After processing the command the instrument sends back the appropriate response telegram. The time between the last character in the request telegram and the first character in the data telegram is < 0.5ms.
The user-defined telegram and the telegrams, as for the definitions described under 'Fixed telegram formats‘, are available as data telegrams.

7.4.2 Independent telegram output

Independent telegram output is selected using the command TT. After a valid telegram type has been input, the ULTRASONIC independently transmits the data telegram selected. The transmission interval is set in ms using the command OR. The telegram is transmitted every 100ms as standard. If the baud rate selected does not allow the output cycle to be observed (the time for data transmission is greater than the interval time), it is possible that telegram output cannot be carried out.
Independent telegram output is only possible in full duplex mode.

7.4.3 Fixed telegram formats

A number of predefined telegrams are available to for the independent output of telegrams (commands TT) and data request (Command TR). The detailed structure is described in 'Appendix 1 Predefined data telegrams'. A reference list of telegram formats can be found in '**Table 6: List of predefined data telegrams.**

Telegram name	Telegram number	Telegram structure
VD	00001	(STX)gg.g ddd*cc(CR)(ETX)
VDT	00002	(STX)gg.g ddd ttt.t ss*cc(CR)(ETX)
V4DT	00003	(STX)ggg.g ddd ttt.t v ss*cc(CR)(ETX)
NMEA V 2.0	00004	$WIMWV,ddd.d,R,ggg.g,v,A*xx(CR)(LF)
Standard deviation	00005	(STX)gg.g hhh.h ddd eee ttt.t uuu.u ss*cc(CR)(ETX)
User-specific	00006	The user-specific telegram is output
Vx, Vy	00007	(STX)aaa.a;bbb.b;ttt.t;ss;cc(CR)(ETX)
VD- Variant 1	00008	(STX)gg.g ddd*cc(CRLF)(ETX)
VDT- Variant1	00009	!iigggdddttttwf(CR)

Table 6: List of predefined data telegrams

Remark:
Telegram 9 (VDT-variant 1) is available only with model 4.3811.00.000.

Where

g: wind velocity (see **Command OS**
h: standard deviation of wind velocity
d: wind direction
e: standard deviation of wind direction
t: temperature
u: standard deviation of temperature
s: status byte
c: Check sum Type 1 (EXOR link)
v: identifier for scaling of wind velocity (K, N, M, S = km/h, Knots, m/s, mph)
a: wind velocity in X-direction (east -> west)
b: wind velocity in Y-direction (north -> south)
w: Status byte Variant 1
f: Check sum Type 2
i: Instrument ID

7.4.4 Generation of check sum

Depending on the output telegram two different check sums are generated; type 1 resp. type 2

7.4.4.1 Type 1

The check sum is the result of the byte wise EXOR link of the bytes output in the telegram.
The EXOR link encompasses all bytes between the telegram start character "STX", or "$" with the NMEA telegram and the byte "* " as the identifying character for the start of the check sum.
The bytes "STX" or "$" and "* " are thus not taken into account for calculation of the check sum!

7.4.4.2 Type 2

The check sum is the result of the byte wise EXOR link of the bytes output in the telegram.
With the resulting check byte, high- and low-nibbles are linked, and are output as ASCII-value.

7.4.5 User-specific telegram

The ULTRASONIC offers the user the option of specifying his own telegrams. A formatted text can be used to output the internal measured and status values of the ULTRASONIC. Over 30 different values are available for output.
The user-defined telegram with the telegram number 6 is output. For example, the input of 00TR00006 prompts the ULTRASONIC to output the user-defined telegram.
The commands UA, UT, UR and US are available to define the user-defined telegram. See here also: **Command UA, Command UR, Command US, Command UT**. These commands can be used to create a new telegram, extend an existing telegram, delete telegram information and lastly, to store the telegram definition in the EEPROM.
The measured values are selected and the format specified in the formatted text. '**Table 7: Measured values and data types for user-specific telegram** shows a list of the available data.
The formatted text also includes the option of outputting a fixed character string. The definition

00UAHello World\0d<cr> <cr> stands for Carriage return (Enter key)

generates the telegram output

Hello World

7.4.5.1 Generation of a new, user-specific telegram

The command UT is used to overwrite an existing telegram in full. For example with the command:

00UTWind velocity: @8,6,2@m/s\0d<cr> <cr> stands for Carriage return (Enter key)

the output

Wind velocity: 001.64m/s

is returned with the telegram output. (The prerequisite is of course that the current wind velocity is 1.64m/s).

7.4.5.2 Attachment of definitions

The command UA can be used to attach new definitions at the end. Here it must be borne in mind that the attachment of definitions may require more memory than telegram definition using the command UT.

Internally the ULTRASONIC is equipped with over 30 definition blocks. Each of these blocks can accommodate the definition of one data value or 5 fixed characters. It must be borne in mind that once a block has been defined, it cannot be extended.

Example:
The definition

00UAHELLO<cr> <cr> stands for Carriage return (Enter key)

generates a new block which contains the character string HELLO.

The definitions
UAH<cr> <cr> stands for Carriage return (Enter key)
UAE<cr> <cr> stands for Carriage return (Enter key)
UAL<cr> <cr> stands for Carriage return (Enter key)
UAL<cr> <cr> stands for Carriage return (Enter key)
UAO<cr> <cr> stands for Carriage return (Enter key)

occupy 5 blocks, in which only one character each is seized. The output leads to the same result in both cases, but considerably more memory is used in the second version.

A new block is generally always started with a definition of a measured value. Definition of a measured value is always framed with the character '@' . A new block is also occupied after the definition of a measured value. If this is taken into consideration on inputting, the same effective memory occupancy can be achieved using the command UA as with the command UT.

The method using the least amount of memory is to input the complete telegram using the command UT.

7.4.5.3 Deletion of definitions

The deletion of definitions always relates to the last blocks in the definitions list: see **7.4.5.2 Attachment of *definitions*.**

The command UR00002 can be used to delete the last two definition blocks, for example. It should be noted that a definition, input using UA or UT, can be divided up internally into several blocks. It is therefore recommended proceeding step by step when deleting definitions and checking the effect in telegram 6.

7.4.5.4 Storage of definitions

After the user-defined telegram has been input, it can be stored using the command 00US00002. Storage is necessary to ensure that the ULTRASONIC loads the defined telegram on the next restart.

7.4.5.5 Available measured values and data formats

The measured values (shown by a number) and the output format of the measured value are defined in the user-specific telegram within the formatting characters '@' Here every measured value is an object of a data type. Data types are for example TEXT, NUMBER or WHOLE_NUMBER. The wind velocity is for example the data type NUMBER: see **Table 7: Measured values and data types for user-specific telegram.**

Example:

The wind velocity is to be output in the user-specific telegram. From the table given below it can be seen that the wind velocity has the index 8. The formatting string thus starts with
00UT@8

It can also be seen from the table that the WV is the data type NUMBER. If the wind velocity is to be output without a sign using a total of 6 characters (including comma) and 2 places after the comma, the complete formatting string is as follows:

00UT@8,6,2@

If a line feed is to also be added to the end of the output, the ASCII character 13 (0Dh) must be attached.

00UT@8,6,2@\0d<cr> <cr> stands for Carriage return (Enter key)

Measured value number	Description	Data type
0	Reserved	
1	Path measured value north -> south (counter value) With averaging this is the mean value of all measured values	WHOLE_NUMBER
2	Path measured value west -> east (counter value) With averaging this is the mean value of all measured values	WHOLE_NUMBER
3	Path measured value south -> north (counter value) With averaging this is the mean value of all measured values	WHOLE_NUMBER
4	Path measured value east -> west (counter value) With averaging this is the mean value of all measured values	WHOLE_NUMBER
5	Time stamp of last measured data record (value in ms, relative to system startup).	WHOLE_NUMBER
6	Wind velocity in X-direction (Positive means wind in an easterly direction)	NUMBER
7	Wind velocity in Y-direction (Positive means wind in a	NUMBER

	northerly direction)	
8	Wind velocity	NUMBER
9	Wind direction	NUMBER
10	Normalised wind velocity X-direction	NUMBER
11	Normalised wind velocity Y-direction	NUMBER
12	Virtual temperature [°C]	NUMBER
13	Virtual temperature of X-path [°C] This value is not contained in the averaging buffer. The last measured value in the averaging interval is output. If the last measurement fails to generate a valid value, -273,15 displayed)	NUMBER
14	Virtual temperature of Y-path [°C] This value is not contained in the averaging buffer. The last measured value in the averaging interval is output. If the last measurement fails to generate a valid value, -273,15 displayed)	NUMBER
15	Measured value counter Specifies the number of data records measured since system startup.	WHOLE_NUMBER
16	Standard deviation of wind velocity in X-direction	NUMBER
17	Standard deviation of wind velocity in Y-direction	NUMBER
18	Standard deviation of wind velocity	NUMBER
19	Standard deviation of wind direction	NUMBER
20	Standard deviation of normalised wind velocity in X-direction	NUMBER
21	Standard deviation of normalised wind velocity in Y-direction	NUMBER
22	Standard deviation of virtual temperature	NUMBER
23	Reserved	
24	Reserved	
25	Reserved	
26	Status information (4BYTE)	WHOLE_NUMBER
27	THIES status (2Byte)	WHOLE_NUMBER
28	Reserved	
29	Storage interval (specifies the time interval in which the data are written to the averaging memory)	WHOLE_NUMBER
30	Quantity of data in the mean value buffer	WHOLE_NUMBER
31	Read-in analogue measured value from pin WV/RXD-	NUMBER (since V1.38)
32	Read-in analogue measured value from pin WD/RXD+	NUMBER (since V1.38)
33	Read-in analogue measured value from pin ADIO	NUMBER (since V1.38)
34	Read-in analogue measured value of reference voltage (980..1010)	
35	Reserved	
36	Exclusive OR proof total of data flow 8 (type 1)	PRÜF_SUMME
37	ULTRASONIC ID	WHOLE_NUMBER
38	Wind velocity of the gust (see command GU)	NUMBER
39	Wind direction of the gust (see command GU)	NUMBER

Table 7: Measured values and data types for user-specific telegram

7.4.5.6 Data formats

As already described under Available measured values and data formats, every data value is derived from a specific type. To indicate this the types each have their own formatting definition. The formatting string is specified after the measured value number on inputting, with the formatting string and measured value number being separated here by a comma.

Example:
The command

00UTHello World @12,8,2,1@\0d<cr> <cr> stands for Carriage return (Enter key)

defines output of the text 'Hello World', followed by the virtual temperature (formatted: 8 characters in total, 2 characters after the comma, with sign) and one line feed.

7.4.5.6.1 Output of fixed texts

The ULTRASONIC is equipped with an internal data format TEXT that is the simplest and at the same time most universal data format. It is used to output fixed text within the telegram output. This data format requires no further formatting characters. For example, the command

00UTHello World\0d<cr>
defines the output telegram

Hello World

Within this data type all ASCII characters are available via the key character '\' . It must nevertheless be borne in mind that the ASCII code is specified with 2 characters in the hexadecimal format. The input

00UT\41

thus generates an A in the output. The key character \ was introduced in order to include a control character like STX, ETX, CR in a telegram. The input

00UA\0d

attaches a line feed to the telegram.

A constant text can be positioned anywhere in the telegram definition (it should of course not interrupt the formatting of another data type). For example, the following definition is conceivable:

00UTWV = @8,6,2@ WD = @9,3@\0d<cr> <cr> stands for Carriage return (Enter key)

The following output string is conceivable:

WV = 000.06 WD = 210

7.4.5.6.2 Data format WHOLE_NUMBER

A whole number is a number which is output without commas. However, it can include a sign or /and be in hexadecimal format.

Format:
@'Measured value','Number of characters','Format'@

where

Measured value: see **Table 7: Measured values and data types for user-specific telegram**
Number of characters: number of characters output including any sign
Format: format of number shown
0: without sign and decimal
1: with sign and decimal
2: without sign and hexadecimal
3: with sign and hexadecimal

The number of characters and the 'Format' do not have to be specified; in this case they are padded with the values '3' (Number of characters) and '0' (Format).

Example 1:
00ut@29@\0d<cr> <cr> stands for Carriage return (Enter key)

Outputs the storage interval with three places without a sign. (Only with averaging switched on is display not equal to zero)

Example 2:
00ut@29,3,2@h\0d<cr> <cr> stands for Carriage return (Enter key)

Outputs the storage interval with three places without a sign as a hexadecimal value. (Only with averaging switched on is display not equal to zero)

7.4.5.6.3 Data format NUMBER

A floating point number is known as a number. It is formatted as for the WHOLE_NUMBER with the addition that a decimal place can be included.

Format:
@'Measured value','Number of characters',' Decimal places','Format'@

with

Measured value: see **Table 7: Measured values and data types for user-specific telegram**
Number of characters: number of characters output including decimal points? and any sign
Decimal places': number of places after decimal points?
Format: format of number shown
0: without sign and decimal

1: with sign and decimal
2: without sign and hexadecimal
3: with sign and hexadecimal

The number of characters, decimal places and the 'Format' do not have to be specified; in this case they are padded with the values '3' (Number of characters) '0' (Decimal places) and '0' (Format) .

Example 1:
00ut@9@\0d<cr> <cr> stands for Carriage return (Enter key)

Outputs the wind direction with three places before the decimal point?, no places after the decimal point? and in decimal format.

Example 2:
00UT@12,8,2,1@\0d<cr> <cr> stands for Carriage return (Enter key)

Outputs the virtual temperature with a total of 8 characters, 2 places after the decimal point? and plus sign.

7.4.5.6.4 Data format PRÜF_SUMME (proof total)

The data format PRÜF_SUMME supports calculation of a proof total on the basis of a bytewise exclusive OR link. The PROOF TOTAL has the following format:

@36,'First','Last', 'Number of characters','Format'@

where

36: Measured value identifier for EXOR proof total
First: Number of character at which generation of the proof total starts. This character is included in the calculation (counting method starts with 0)
Last: Number of character at which generation of the proof total ends. This character is not included in the calculation
Number of characters: Number of characters output including any sign
Format: Format of number shown
0: without sign and decimal
1: with sign and decimal
2: without sign and hexadecimal
3: with sign and hexadecimal

Example 1:
With a constant text 'AABBCC' the proof total is to be generated using the characters BB. The output is hexadecimal with 2 characters:

00UTAABBCC XOR=@36,2,4,2,2@h\0d<cr> <cr> stands for Carriage return (Enter key)

The output is

AABBCC XOR=00h

The XOR link of two identical characters is always 0.

Example 2:
The proof total is to be generated using the character 'B' via a constant text 'AABBCC'. The output is hexadecimal with 2 characters:

00UTAABBCC XOR=@36,2,3,2,2@h\0d<cr> <cr> stands for Carriage return (Enter key)

The output is

AABBCC XOR=42h

The value for the proof total is 42h. The ASCII value of 42h is 'B', which is the character to be checked itself.

7.4.6 Status information

In the ULTRASONIC two different status bytes are available:

- generic status information
- THIES status

The THIES status is derived from the generic status information. The structure of the status values is described below.

7.4.6.1 Generic status information

The generic status is structured bitwise. The individual bits in the status value have the following meanings:

Bit number	Function	Description	
Bit 0	General malfunction	Averaging time < 10sec	An error is output when no new measured value can be determined during a period of 10sec.
		Averaging time >= 10sec	An error is output when, based on a one-second measuring rate, less than 50% of values are contained. Example: With an averaging time of 10 seconds 5 measured values must be contained in the averaging buffer.
Bit 1	Heating criterion	Is one when the criterion for switch-on of the heating is satisfied.	
Bit 2	Heating on	Is one when heating is switched on.	
Bit 3	Reserved	Is always zero.	
Bit 4	Static malfunction	Is set when a static malfunction has occurred, e.g. lasting violation of VT, no measured values. (> 1min)	
Bit 5 .. bit 7	Reserved	Is always zero.	
Bit 8	Used averaging memory	Specifies the averaging memory occupied. Bit 1 to bit 3 indicate the filling level of the averaging buffer in binary format. 0: Buffer 0< x ≤ 1/16 1: Buffer 1/8 < x ≤ 1/8 filled 2: Buffer 1/8 < x ≤ 3/16 filled 3: Buffer 3/16 < x ≤ 1/4 filled 4: Buffer 1/4< x ≤ 5/16 filled 5: Buffer 5/16 < x ≤ 3/8 filled 6: Buffer 3/8 < x ≤ 7/16 filled 7: Buffer 7/16 < x ≤ 1/2 filled 8: Buffer 1/2 < x ≤ 9/16 filled 9: Buffer 9/16 < x ≤ 5/8 filled 10: Buffer 5/8 < x ≤ 11/16 filled 11: Buffer 11/16 < x ≤ 3/4 filled 12: Buffer 3/4 < x ≤ 13/16 filled 13: Buffer 13/16 < x ≤ 7/8 filled 14: Buffer 7/8 < x ≤ 15/16 filled 15: Buffer 15/16 < x ≤ 1 filled	
Bit 9			
Bit 10			
Bit 11			
Bit 12..bit15	Reserved	Is always zero.	
Bit 16..bit31	Reserved	Is always zero.	

7.4.6.2 THIES status

The THIES status is structured bitwise. The individual bits in the status value have the following meanings:

Bit number	Function	Description	
Bit 0	General malfunction	Averaging time < 10sec	An error is output when no new measured value can be determined during a period of 10sec.
		Averaging time >= 10sec	An error is output when, based on a one-second measuring rate, less than 50% of values are contained in the averaging buffer. Example: With an averaging time of 10 seconds at least 5 measured values must be contained in the averaging buffer.
Bit 1 Bit 2 Bit 3	Used averaging memory	Specifies the averaging memory occupied. Bit 1 to bit 3 indicate the filling level of the averaging buffer in binary format. 0: Buffer 0< x ≤ 1/8 1: Buffer 1/8 < x ≤ 1/4 filled 2: Buffer 1/4 < x ≤ 3/8 filled 3: Buffer 3/8 < x ≤ ½ filled 4: Buffer ½ < x ≤ 5/8 filled 5: Buffer 5/8 < x ≤ 3/4 filled 6: Buffer 3/4 < x ≤ 7/8 filled 7: Buffer 7/8 < x ≤ 1 filled	
Bit 4	Reserved	Is always zero.	
Bit 5	Static malfunction	Is set when a static malfunction has occurred, e.g. lasting violation of VT, no measured values. (> 1min)	
Bit 6	Heating criterion	Is one when the criterion for switch-on of the heating is satisfied.	
Bit 7	Heating on	Is one when heating is switched on.	

Attention: For model 4.3810.00.399 bit 1 is always 1 in the THIES-status

7.4.6.3 Status Information in the Bayern Hessen Format

For the Bayern Hessen command interpreter a separate operating status and error status are generated with the following construction:

Bayern Hessen Operating Status:

Bit-Number	Function	Description
Bit 0		Always zero
Bit 1 Bit 2 Bit 3	Used Averaging memory	Specifies the averaging memory occupied. Bit 1 to bit 3 indicate the filling level of the averaging buffer in binary format. 0: Buffer 0< x ≤ 1/8 1: Buffer 1/8 < x ≤ 1/4 filled 2: Buffer 1/4 < x ≤ 3/8 filled 3: Buffer 3/8 < x ≤ ½ filled 4: Buffer ½ < x ≤ 5/8 filled 5: Buffer 5/8 < x ≤ 3/4 filled 6: Buffer 3/4 < x ≤ 7/8 filled 7: Buffer 7/8 < x ≤ 1 filled
Bit 4	Reserved	Is always zero
Bit 5	Heating criterion	Is one when the criterion for switch-on of the heating is satisfied..
Bit 6	H Heating on	Is one when heating is switched on
Bit 7	Reserved	Is always zero

Bayern Hessen Error status:

Bit-Number	Function	Description	
Bit 0	General malfunction	Averaging time < 10sec	An error is output when no new measured value can be determined during a period of 10sec.
		Averaging time >= 10sec	An error is output when, based on a one-second measuring rate, less than 50% of values are contained in the averaging buffer. Example: With an averaging time of 10 seconds at least 5 measured values must be contained in the averaging buffer.
Bit 1	Static malfunction	Is set when a static malfunction has occurred, e.g. lasting violation of VT, no measured values. (> 1min)	
Bit 2..7	reserved	Always zero	

7.5 Behavior in fault conditions

The ULTRASONIC is equipped with a highly effective internal fault detection and correction system. This allows it to detect incorrect measured values using the history and to correct them where possible . It cannot however be ruled out that the ULTRASONIC will get into a situation in which the acquisition of new data is impossible. In this case the error bits are set in the status values and a defined value possibly output at the analog outputs.

It is a basic rule that the measured values output are always valid and can be interpreted by the target system (unless a specific error telegram is output in the in the case of error). However, what happens in the case of error is that the data become 'too old', i.e. they are not updated over a certain time and freeze. In this case the error bits are set in the status byte and the analog outputs are set to a defined value. If a special error telegram is defined with a serial telegram, this is output.

From Version V.41 it is possible to carry out an automatic restart in case of a durably disturbed measuring value acquisition. By parameter RF you can set the time period after which the ULTRASONIC restarts, in case no valid data have been measured. The time interval is stated in seconds. In the presetting the value is set to 60 seconds, i.e. the instrument carries out an automatic restart if, for 60 seconds, no valid measuring value has been acquired.

7.5.1 In the event of error:

Error may occur under the following circumstances:

Averaging time < 10sec (parameter AV)	An error is output when no new measured value can be determined during a period of 10sec.
Averaging time >= 10sec (parameter AV)	An error is output when, based on a one-second measuring rate, less than 50% of values are contained in the averaging buffer. Example: With an averaging time of 10seconds at least 5 measured values must be contained in the averaging buffer.

7.5.2 Behaviour of analog outputs

If the analog outputs are active, they are switched to the minimum or maximum value in the case of error. The parameter EI determines which of the two values is output: see **Command EI**

7.5.3 Behaviour of telegram output

In the case of error the relevant error telegram is output. In parallel the error information is shown in the status byte: see Fixed telegram formats.

7.6 Heating control

To prevent the instrument from freezing the ULTRASONIC is equipped with built-in heating for the sensor arms. In standard mode the heating is controlled by the system status. For further information see the **Command HT**. If control of the heating is set to the software, the heating system will switch on under the following conditions:

virtual temperature < 4°C
continuous measuring error > 3sec

The heating system switches off after another 10sec when:
virtual temperature > 8°C
No error in acquisition of measured values

Effective from software version V 1.3 it is possible to control the heating via the external signal ADIO. A respective level at this pin allows or avoids an activation of the heating. This signal can be used in order to prevent the heating from switching on in case the power supply of the instrument is low (for example battery operation).

The function of the ADIO-Pin is controlled by the command AC (see **Command AC**)

7.7 Output of all system parameters

Most parameters of the ULTRASONIC are stored internally in an EEPROM. The command SS can be used to output all stored parameters.
Before amending parameters it is recommended making a backup copy of existing settings and storing them in a text file: see also **Command SS**.

7.8 Enquiry about software version

The command SV is used to enquire about the software version. For further information see **Command SV**

7.9 Bayern Hessen mode

The standard version of the ULTRASONIC contains a command interpreter for Bayern Hessen telegrams. For further information refer to own documentation.
The command interpreter for the Bayern Hessen variant is switched on using the command 00CI00001: see also **Command CI**

For coding the operating status and error status refer to **Bayern Hessen Error status:**

In the Bayern Hessen command interpreter also all commands of the ULTRASONIC are available. They are embedded in the command <CTR B>ST0....<CTRL C>. Thus, for example, the user access is activated by the command <CTR B>ST000KY00001<CTRL C> and by <CTR B>ST000AM00001<CTRL C> the averaging time is changed.

Moreover, in the Bayern Hessen mode different combinations of measuring instrument addresses are available, see **Command BH.**

7.10 Forcing a restart

The command RS can be used to force a restart of the ULTRASONIC. The commands

00KY00001<cr>
00RS00001 <cr>

will restart the ULTRASONIC after approx. 3sec: see also **Command RS**

7.11 Energy-saving mode

The ULTRASONIC does not itself have an energy-saving mode. However, it can be configured so that it only has to be supplied with power for a limited period. The following parameters can be used for optimisation:

Switch on fast boot:

On startup using the parameter 00FB00001 prevents the ULTRASONIC from first starting the bootloader and waiting for a program update.

Signal when averaging buffer is full:

The connector pin ADIO can be switched so that the PIN is set to +%V when the averaging buffer of the ULTRASONIC has reached a content level > 7/8. Here the shortest adjustable averaging time is 600ms: see also **Command AC**, **Command AV**. The signal can be used to disconnect the ULTRASONIC from the voltage supply.

Switch off heating:

With the command 00HT00000 the heating of the ULTRASONIC is switched off completely: see **Command HT.**

7.12 Bootloader

Whenever the ULTRASONIC is restarted, the instrument first starts a bootloader. The function of the program is to start program upload. For this a specific program containing the new firmware must be started at a connected PC. After identification program upload then starts automatically. If the bootloader does not know its remote station, the ULTRASONIC firmware starts. The bootloader can be bypassed if the parameter

00FB00001 or FB00002

is set.

7.13 Fast boot

See Energy-saving mode.

7.14 Plausibility

To identify incorrectly measured values the ULTRASONIC offers an internal plausibility check which assesses measured values using the history. Incorrect measured values can be caused for example by heavy rainfall or foreign bodies in the measurement path.
If an incorrect measured value is identified, the ULTRASONIC sets its acquisition of measured values to the maximum speed. In this mode it is more likely to obtain a valid measured value in fault conditions (e.g. rain). A complete data record is now made every 4ms using all 4 sensors so that the ULTRASONIC generates 250 measured values per second
For plausibility check selection see also **Command MD, Command PC.**
The plausibility algorithms are described in detail in the document ‘Plausibilitätsalgorithmen für ULTRASONIC DSP.doc'.

7.15 Online help

For a short description of commands the ULTRASONIC contains an Online help which provides information about individual commands. The Help text for the command is returned by inputting the command and a '?'.
If the command

00?? ?<cr> <cr> stands for Carriage return (Enter key)

is input, the ULTRASONIC will list all commands with the relevant help.

Example:
Help with setting the baud rate is to be called up: see **Command BR.**
With the command

00BR?<cr> <cr> stands for Carriage return (Enter key)

the ULTRASONIC provides the following response:
BR: Set / get baud rate

0 -> reserved	10 -> 1200 7E1
1 -> reserved	11 -> 1200 7E1
2 -> 1200 8N1	12 -> 4800 7E1
3 -> 2400 8N1	13 -> 9600 7E1
4 -> 4800 8N1	14 -> 19200 7E1
5 -> 9600 8N1*	15 -> 38400 7E1
6 -> 19200 8N1	16 -> 57600 7E1
7 -> 38400 8N1	17 ->115200 7E1
8 -> 57600 8N1	
9 ->115200 8N1	

8 Configuration of ultrasonic anemometer by customer

The Ultrasonic Anemometer 2 D is factory-set prior to delivery to the customer.
Setting is described in the supplementary sheet *"Factory Setting"*.

It is possible for the customer to alter the factory setting of the Ultrasonic Anemometer 2 D or to adapt it to new requirements. Here it should be borne in mind that with a change in settings, the order number allocated at the factory can then no longer help with identification.

The Anemometer 2D can be configured via its serial data interface using commands.
see section :

- *Access mode*
- *Command list*

Any standard terminal program such as "Procomm", "Telix" or a Windows terminal program (e.g. Hyper Terminal) can be used for this purpose.

Recommendation:
After performing configuration please amend the supplementary sheet "Factory Setting" and also send in to the manufacturer in the event of maintenance or repair.

9 List of Commands, brief

	Command	Description
Command AA	T <id>AA<para5>	Functions for PIN WG/RXD-(analogue channel A)
Command AB	T <id>AB<para5>	Functions for PIN WR/RXD+ (analogue channel B)
Command AC	T <id>AC<para5>	Functions for the PIN ADIO (analogue channel C)
Command AM	T <id>AM<para5>	Setting the method of communication (average mode)
Command AN	T <id>AN<para5>	Analogue output mode (analogue output)
Command AO	T <id>AO<para5>	Scaling of the analogue wind direction output (angle output)
Command AR	<id>AR<para5>	Scaling of the analogue wind speed output (analogue range)
Command AT	<id>AT<para5>	Test of the analogue in-/outputs (analogue test)
Command AV	<id>AV<para5>	Communication period (average)
Command AU	<id>AU<para5>	Update of the analogue inputs
Command AY	<id>AY<para5>	Scaling of the minimum value for analogue input PIN WG/RXD-
Command AZ	<id>AZ<para5>	Scaling of the maximum value for analogue input PIN WG/RXD-
Command BH	<id>BH<para5>	Select measuring instrument address of Bavaria Hesse
Command BR	<id>BR<para5>	Selecting the baud rate (baud rate)
Command BX	<id>BX<para5>	Selecting the baud rate (baud rate extension)
Command BY	<id>BY<para5>	Scaling of the minimum value for analogue input PIN WG/RXD+
Command BZ	<id>BZ<para5>	Scaling of the maximum value for analogue input PIN WG/RXD+
Command CI	<id>CI<para5>	Select the command interpreter (command Interpreter)
Command CY	<id>CY<para5>	Scaling of the minimum value for analogue input PIN ADIO
Command CZ	<id>CZ<para5>	Scaling des maximum value for analogue input PIN ADIO
Command DA	<id>DA<para5>	Data request of the command interpreter of Bavaria Hesse
Command DE	<id>DE<para5>	Standard deviation (deviation)
Command DF	<id>DF<para5>	Set initial values (default values)
Command DM	<id>DM<para5>	Duplex mode
Command EI	<id>EI<para5>	Analogue value in case of error (error inversion)
Command FB	<id>FB<para5>	Fast Boot
Command GU	<id>GU<para5>	Maximum value of WV and WD in the averaging buffer (gust acquisition)
Command HT	<id>HT<para5>	Heating control (Heating)
Command ID	<id>ID<para5>	ULTRASONIC ID
Command KY	<id>KY<para5>	Access mode (key)
Command MA	<id>MA>>para5>	Automatic adjustment of the measuring value acquisition (measurement automation)
Command MD	<id>MD>>para5>	Measuring interval (measurement delay)
Command NC	<id>NC<para5>	North Correction
Command OD	<id>OD<para5>	Emulation of an ULTRASONIC 1D (one dimension)
Command OR	<id>OR<para5>	Telegram output interval (output ratio)
Command OS	<id>OS<para5>	Scaling of wind speed output (output scale)
Command PC	<id>PC<para5>	Plausibility check
Command PR	<id>PR<para5>	Period receive time
Command PT	<id>PT<para5>	Period Transmit Time
Command RD	<id>RD<para5>	Response delay
Command RF	<id>RF<para5>	Restart in case of static error
Command RS	<id>RS<para5>	Re-start ULTRASONIC (reset)
Command SH	<id>SH<para5>	Serial number high word
Command SL	<id>SH<para5>	Serial number low word
Command SC	<id>SC<para5>	Minimum value of analogue outputs (start current)
Command SS	<id>SS<para5>	System status
Command SV	<id>SV<para5>	Software version
Command TC	<id>TC<para5>	TC Temperature correction
Command TE	<id>TE<para5>	Sensor delay EAST sensor
Command TN	<id>TN<para5>	Sensor delay NORTH sensor
Command TR	<id>TR<para5>	Telegram request (transmit request)
Command TT	<id>TT<para5>	Autonomous telegram output (transmit telegram)
Command TS	<id>TS<para5>	Sensor delay SOUTH sensor

Command TW	<id>TW<para5>	Sensor delay WEST sensor
Command UA	<id>UA<para5>	Add definition to user-defined telegram (add user telegram item)
Command UR	<id>UR<para5>	Remove one or several definitions at the end of the user-defined telegram (remove user telegram item)
Command US	<id>US<para5>	Save user-defined telegram (user telegram save)
Command UT	<id>UT<para5>	Telegram acc. to user's specification (user telegram)
Command VC	<id>VC<para5>	Constant velocity correction (velocity correction)
Command VT	<id>VT<para5>	Angle-dependent velocity correction (Velocity table)
Command XI	<id>XI<para5>	External ID

10 Command list

Command AA

T <id>AA<para5> Functions for PIN WV/RXD-(Analog channel A)
Access: User mode
Description: Sets the mode for PIN WV/RXD-. Values for this parameter can only be changed when the ULTRASONIC is switched to half duplex mode (see **Command DM** For the signal lines WV/RXD- the following function is specified with the parameters (0..3):

Parameter description:

0: Analog input signal is not used. Full duplex mode is possible (see **Command DM**

1: WV/RXD- is used as analog input. The analog voltage value at WV/RXD- is read in cyclically by the system and digital conversion performed. The analog output value for WV is switched off (see **Command AN**). Sampling is 0.1s per configured channel (see **Command AB**and **Command AC**). If at least one of the channels AA,AB or AC are used as an analog input, the reference voltage is automatically included in the conversion cycle. An additional 0.1s is required for conversion of the reference voltage.
With a maximum input voltage of 9.96V the digital value output is 4096 with an accuracy of 0.7%.
The prerequisite for this mode is half duplex mode (see **Command DM**)

2: Self test of analog wind velocity output
In this state the analog output signal of the wind velocity is read back via the analog input signal. The prerequisite is that the analog wind velocity output is switched as a voltage output.
(see Command AN)
WV/RXD- must not be connected externally. The analog values WD or WV are output by the ULTRASONIC. The analog voltage value at WV/RXD- undergoes digital conversion cyclically and is read in by the system.
The digital value read-in can be output via the user-defined telegram (see User-specific telegram).
The prerequisite for this mode is half duplex mode (see **Command DM**)

3: Reserved.

4: Input used as SONIC ID (Bit 0). If the mode is selected in which the ULTRASONIC is to receive its ID via the external lines, this PIN <u>must</u> be configured as follows: 00AA00004. (see also **Command XI**)

When using AA,AB and AC the parameter AN must not be switched to two!!! See also **Command AN**

Range of values 00000..00004
Initial value: 00000

Command AB

T <id>AB<para5> Functions for PIN WD/RXD+ (Analog channel B)
Access: User mode
Description: Sets the mode for the analog input WD/RXD+. The values for this parameter can only be changed when the ULTRASONIC is switched to half duplex mode (see **Command DM**). For the signal lines WD/RXD+ the following function is specified with the parameters (0..3):

Parameter description:

0: Signal is not used. Full duplex mode is possible (see **Command DM**

1: WD/RXD+ is used as analog input. The analog voltage value at WV/RXD+ is read in cyclically by the system and digital conversion performed. The analog output value for WD is switched off (see **Command AN**). Sampling is 0.1s per configured channel (see **Command AA** and **Command AC**). If at least one of the channels AA,AB or AC is used as an analog input, the reference voltage is automatically included in the conversion cycle. An additional 0.1s is required for conversion of the reference voltage.
The prerequisite for this mode is half duplex mode (see **Command DM**)
With a maximum input voltage of 9.96V the digital value output is 4096 with an accuracy of 0.7%.

2: Self test of analog wind direction output
In this state the analog output signal of the wind direction is read back via the analog input signal. The prerequisite is that the analog wind direction output is switched as a voltage output (see Command AN).
WD/RXD+ must not be connected externally. The analog voltage value at WV/RXD+ undergoes digital conversion cyclically and is read in by the system.
The digital value read-in can be output via the user-defined telegram (see User-specific telegram).
The prerequisite for this mode is half duplex mode (see **Command DM**)

3: Reserved.

4: Input used as SONIC ID (Bit 1). If the mode is selected in which the ULTRASONIC is to receive its ID via the external lines, this PIN <u>must</u> be configured as follows: 00AB00004. (see also **Command XI**)

When using AA,AB and AC the parameter AN must not be switched to two!!! See also **Command AN**

Range of values 00000..00004
Initial value: 00000

Command AC

T <id>AC<para5> Functions for PIN ADIO (Analog channel C)
Access: User mode
Description: Sets the mode for PIN ADIO. The PIN ADIO can either be switched as an analog input, digital input or digital output. The functions of the PIN ADIO are independent of the duplex mode selected

Parameter description:

0: Signal is not used.

1: PIN is used as analog input. The analog voltage value is read in cyclically by the system . The conversion interval is 0.1s per configured channel. If at least one of the channels AA,AB or AC is used as an analog input, the reference voltage is automatically included in the conversion cycle. An additional 0.1s is required for conversion of the reference voltage.

With a maximum input voltage of 9.96V the digital value output is 4096 with an accuracy of 0.7%.

2: Reserved

3: Reserved

4: Input used as SONIC ID (Bit 2). If the mode is selected in which the ULTRASONIC is to receive its ID via the external lines, this PIN must be configured as follows: 00AC00004. (see also **Command XI**)

5: PIN is switched as digital output. The output is set to +5V when the averaging buffer is filled to over 80% for the first time after startup. This function can be used when the ULTRASONIC is to be operated so that it is to be disconnected from the voltage supply after complete measurement: see also Energy-saving mode.

6: PIN is switched as digital output. The output is set to 0V.

7: PIN is switched as digital output. The output is set to +5V.

8: The PIN ADIO is used for the heating control. With a level at <2V the heating switches off, a level at >3V activates the heating control.(see **Command HT**.)

9: The PIN ADIO is used for the heating control. With a level at >3V the heating switches off, a level at <2V activates the heating control. (see **Command HT**)

10: The PIN ADIO is used for heating control. If Pin ADIO is not connected, or the set level is > 3 V the parameterized heating control is active.
A level of < 2 V deactivates the heating; see command HT.
A connection from PIN 6 (AGND) to PIN 3 (ADIO) deactivates the heating control. (Heating is off)

Range of values 00000..00010
Initial value: 00000

Command AM

T <id>AM<para5> Selection of averaging method (Average Mode)
Access: User mode

Description: This command can be used to select the type of averaging method. Averaging can be either vectorial or scalar: see also Averaging.

Parameter description:

0: vectorially averaged velocity and vectorially averaged angle
1: scalarly averaged velocity and scalarly averaged angle
2: scalarly averaged velocity and vectorially averaged angle
3: vectorially averaged velocity and scalarly averaged angle

Range of values 00000..00003
Initial value: 00000

Command AN

T <id>AN<para5> Analog output mode (Analog output)
Access User mode
Description: Sets the mode for output of the analog wind direction (WD) and wind velocity (WV). This command can be used to switch between the current output and voltage output. Any change in the value always relates to both outputs (WD and WV) simultaneously. The output value range can be selected with the **Command SC**. It is either 0..20mA (0..10V) or 4..20mA (2..10V): see **Command SC**

The command can only be changed when the mode half duplex is selected: see **Command DM**

Parameter description:

0: Voltage output
1: Current output
2: Analog outputs are not used. Internal calculation and output of the analog values is switched off completely when AN=2 is set and with AA=AB=AC=0.

Range of values 00000..00002
Initial value: 00000

Command AO

T <id>AO<para5> Scaling of analog wind direction output (Angle Output)
Access: User mode
Description: With analog output of the wind direction scaling can be selected in which the angle is output. To preserve compatibility with existing systems it is sometimes necessary to select an extended angle range. The ranges 0..360°, 0..540° and 0..720° are supported here.
See also **Command AN, Command DM, Command SC**

Parameter description:

0: Output of angle in range 0..360° (0° is north)
1: Output of angle in range 0..540° (0° is west)
2: Output of angle in range 0..720° (0° is south);

Range of values 00000..00002
Initial value: 00000

Command AR

<id>AR<para5> Scaling of analog wind velocity output (Analog Range)
Access: User mode
Description: Specifies the range used for scaling of the analog wind velocity output. The standard ULTRASONIC scales the wind velocity as follows:
0..10V (2..10V) corresponds to 0..60m/s
It may however also be sensible to scale the wind velocity of 0..30m/s:
0..10V (2..10V) corresponds to 0..30m/s
The end of the measuring range is specified with this parameter. Specification is made in m/s.

Parameter description:

0..100: Specifies of the end of the measuring range of the wind velocity (WV).

If the command AR00045 is input for example, 10V or 20mA corresponds to a wind velocity of 45m/s.

Range of values 00001..00100
Initial value: 00060

Command AT

<id>AT<para5> Testing of analog inputs/outputs (Analog Test)
Access: User mode
Description: The command tests the analog outputs / inputs. This command can be used to switch a digital value to the analog wind velocity and wind direction outputs and to read it back via the analog inputs. The prerequisite for the test is that the PINs WV/RXD-, WD/RXD+ and ADIO are not connected.
The values of the PINs WV/RXD-, WD/RXD+ and ADIO are output at the end of the test. Output of the digitised reference voltage also takes place. Input of the command 00AT03000 is followed by the output:

00at03000	Telegram request
!00AT00000	Output of PIN ADIO (when open -> then 0)
!00AT03001	Output of PIN WD/RXD+ (corresponds to 1000)
!00AT03008	Output of PIN WV/RXD- (corresponds to 1000)
!00AT00990	Output of internal reference voltage (constant: 985..1015)
!00AT00000	Response to at request

Parameter description:

0..4095: The relevant value is written to the outputs and read back via the AD converter.

The prerequisite for the test is that the mode half duplex is switched on in the ULTRASONIC: see **Command DM**

Range of values 00000..4095
Initial value: No initial value

Command AU

<id>AU<para5> Update of the analogue inputs
Access: user mode
Description: By means of this command the time interval is fixed where the analogue inputs are scanned and processed internally. The parameter fixes the interval between two measurements. If several inputs are active the scanning interval of all channels is the product of the channels to be transformed and the set time interval.

Example:
The channel ADIO is connected as analogue input.
In this case the reference voltage is automatically accepted in the list of channels to be transformed. The scanning interval is (at AU00050) 100ms

Value range: 00001..256
Initial value: 50

Command AV

<id>AV<para5> Averaging period (Average)
Access: User mode
Description: This command can be used to specify the period over which the ULTRASONIC averages its measured values. Given the high measuring speed of up to 4ms for the generation of a measured value, the use of averaging is sensible in most cases.

Parameter description:

Parameter for AV	Selected averaging time
0	No averaging
1	Averaging over 1s
2	Averaging over 10s
3	Averaging over 60s
4	Averaging over 120s
5	Averaging over 10min
6..60000	Averaging over n* 100ms, e.g. 00AV00025 means averaging over 2.5s

Table 8: Adjustment of averaging periods with parameter AV

The averaging memory is designed as a sliding memory. With every measurement the measured value is provided with a time stamp. The mean value buffer is only so large as data over the averaging period is contained in the memory.

On startup the data of the averaging memory are instantly valid. Averaging is performed immediately using the measured values available as the quality of the measured values is not achieved until a certain content level of the mean value buffer. If an averaging period of AV00000 is selected, the averaging period is calculated from the selected output interval OR (see Command OR). The averaging period is calculated as follows:

T [averaging period in 100ms] = OR/100

Range of values 00000..60000
Initial value: 10

Command AY

<id>AY<para5> Scales the minimum value of the analogue input PIN WG/RXD-(analogue channel A)
Access: User mode
Description: The measuring values of the analogue inputs can be output in scaled form. By means of the command AY the output value is stated for 0V input voltage. The value for the parameter AY is calculated as follows:
Parameter value = 30000+(reference value*10)

See also 0 and command AZ

Command AZ

<id>AZ<para5> Scales the minimum value of the analogue input PIN WG/RXD-(analogue channel A)
Access: User mode
Description: The measuring values of the analogue inputs can be output in scaled form. By means of the command AZ the output value is stated for 9,96V input voltage. The value for the parameter AZ is calculated as follows:
Parameter value = 30000+(reference value*10)

See also 0 and **Command AY**

Command BH

<id>BH<para5> Selects the Bayern Hessen measuring instrument addresses
Access: User mode
Description: The ULTRASONIC contains several command interpreters. The THIES command interpreter is active in standard mode. **Command CI** can be used to change the command interpreter. If the Bayern - Hessen interpreter is selected, the measured values for wind direction, wind velocity and virtual temperature are interrogated under different measuring instrument addresses. The command BH specifies which measuring instrument addresses are active. The following combinations are available for selection:

Parameter description:

Parameter value	Measuring instrument address of WV	Measuring instrument address of WD	Measuring instrument address of VT
0	11	1	22
1	400	410	420
2	202	201	211
3	11	1	21
4	81	82	83
5	1	2	3

Table 9: Measuring instrument addresses in Bayern Hessen command interpreter

See also **Command CI**, Bayern Hessen mode.

Command BR

<id>BR<para5> Select baud rate (Baud Rate)
Access: User key
Description: The ULTRASONIC communication can be used with different baud rates. The adjustment range is from 1200baud to 921Kbaud. The baud rate can be selected with the commands BR and BX. With the command BR the baud rate is specified in the range from 1200baud to 115200baud. The command BX specifies the baud rate from 230400baud to 921600baud. The following baud rates are defined for BR:

Parameter description:

2:	1200 baud	8,N,1
3:	2400 baud	8,N,1
4:	4800 baud	8,N,1
5:	9600 baud	8,N,1
6:	19200 baud	8,N,1
7:	38400 baud	8,N,1
8:	57600 baud	8,N,1
9:	115200 baud	8,N,1
10:	1200 baud	7,E,1
11:	2400 baud	7,E,1
12:	4800 baud	7,E,1
13:	9600 baud	7,E,1
14:	19200 baud	7,E,1
15:	38400 baud	7,E,1
16:	57600 baud	7,E,1
17:	115200 baud	7,E,1

Table 10: List of baud rates with telegram BR

When interrogating the baud rate using the command BR, the ULTRASONIC gives back the last programmed baud rate selected either using the command BR or BX.

Range of values 2..17
Initial value: 00005

Command BX

<id>BX<para5> Select baud rate (Baud Rate extension)
Access: User mode
Description: The ULTRASONIC communication can be operated with different baud rates. The adjustment range is from 1200baud to 921Kbaud. The baud rate can be selected with the commands BR and BX. With the command BR the baud rate is specified in the range from 1200baud to 115200baud. The command BX specifies the baud rate from 230400baud to 921600baud. The following baud rates are defined for BX:

Parameter description:

101:	230400 baud	8,N,1
102:	460800 baud	8,N,1
103	921600 baud	8,N,1

Table 11: List of baud rates with telegram BX

Programming of the extended baud rate includes a safety mechanism which does not allow a baud rate to be selected with the command BX when communication cannot be established at this baud rate. With most PCs the maximum baud rate of the integrated RS485 is set at 115200baud. It is not possible to select a higher baud rate. If the ULTRASONIC has a baud rate >115200Kbaud, communication with the instrument might not be possible. To work with such baud rates a standard PC requires a special extension card.
To set the ULTRASONIC to an extended baud rate the procedure given below must be followed:

Output situation:
Communication with the ULTRASONIC is available (e.g. 9600baud)

Change baud rate:
The user selects a new baud rate, e.g. 230400baud.
The ULTRASONIC changes its baud rate, but does not yet store the parameter.
The user sets his PC to the new baud rate.
He repeats the input to change the baud rate (same command as above)
This is the signal to the ULTRASONIC that communication functions at the new baud rate, and it stores the parameter internally.
If the user is unable to set the new baud rate, the ULTRASONIC must be restarted. It will then automatically set the last valid baud rate (here 9600baud)

Example:

00KY00001<cr>	Opens access key
00BX00103<cr>	ULTRASONIC baud rate changed to 921600baud
'Set baud rate at PC to 921600baud'	
00BX00103<cr>	Repeat command for baud rate. The ULTRASONIC stores the baud rate. This baud rate is loaded with every restart.

When interrogating the baud rate using the command BX, the ULTRASONIC gives back the last programmed baud rate selected either using the command BR or BX.

Range of values 101..103
Initial value: As the initial value for the baud rate the command BR is responsible.

Command BY

<id>BY<para5>	Scales the minimum value of the analogue input PIN WG/RXD+(analogue channel B)
Access:	User mode
Description:	The measuring values of the analogue inputs can be output in scaled form. By means of the command BY the output value is stated for 0V input voltage. The value for the parameter BY is calculated as follows: Parameter value = 30000+(reference value*10)

See also **7.2.1 Analog inputs** and command BZ

Command BZ

<id>BZ<para5>	Scales the minimum value of the analogue input PIN WG/RXD+(analogue channel B)
Access:	User mode
Description:	The measuring values of the analogue inputs can be output in scaled form. By means of the command BZ the output value is stated for 9,96V input voltage. The value for the parameter BZ is calculated as follows: Parameter value = 30000+(reference value*10)

See also **7.2.1 Analog inputs** and command BY

Command CI

<id>CI<para5>	Selects the command interpreter (Command Interpreter)
Access:	Configuration mode
Description:	The ULTRASONIC contains several command interpreters. The THIES command interpreter is active in standard mode. The **Command CI** can be used to change the command interpreter. The command interpreter decides the format of the commands input. "THIES" is selected as the standard command interpreter. It awaits commands in the form:

XXBBnnnnn<CR>	Telegram to change a parameter
XXBB<CR>	Interrogation telegram

Where

XX	-> two-position ID (initial value is 00: see **Command CI**)
BB	-> two-character command identifier
nnnnn	->5-character parameter
<CR>	-> Carriage return as delimiter

When changing a parameter it should be ensured that the appropriate access key is selected: see **Command KY**

Parameter description:

0:	Standard Thies command interpreter
1:	Bayern Hessen command interpreter

Range of values	0..1
Initial value:	0

Command CY

<id>CY<para5>	Scales the minimum value of the analogue input PIN ADIO(analogue channel C)
Access:	User mode
Description:	The measuring values of the analogue inputs can be output in scaled form. By means of the command CY the output value is stated for 0V input voltage. The value for the parameter CY is calculated as follows: Parameter value = 30000+(reference value*10) See also **7.2.1 Analog inputs** and Command CZ

Command CZ

<id>CZ<para5>	Scales the minimum value of the analogue input PIN ADIO(analogue channel C)
Access:	User mode
Description:	The measuring values of the analogue inputs can be output in scaled form. By means of the command CZ the output value is stated for 9,96V input voltage. The value for the parameter CZ is calculated as follows: Parameter value = 30000+(reference value*10) See also **7.2.1 Analog inputs** and Command CY

Command DA

<id>DA<para5>	Data request in Bayern Hessen command interpreter
Access:	Enquiry mode
Description:	Requests data in Bayern Hessen format. The command DA complies with the Bayern Hessen specification. It can be used either with or without the measuring instrument address.
Range of values	Depending on measuring instrument addresses selected: see **Command BH**
Initial value:	No initial value

Command DE

<id>DE<para5>	Standard deviation (Deviation)
Access:	User mode
Description:	Switches calculation of standard deviation on or off. The ULTRASONIC includes an option for calculation of the standard deviation. When calculation is switched on, the standard deviation for the wind direction, velocity and temperature is determined. As calculation of the standard deviation is very time-consuming depending on the averaging period, it can be switched on / off separately. Standard deviation is not active when instantaneous values are output.

Parameter description:

0: standard deviation off
1: standard deviation on

Some standard deviation values are output in telegram 5. All further values are available in the user-defined telegram: see Fixed telegram formats and User-specific telegram.

If calculation of the standard deviation is set, the number of the data records in the mean value buffer is limited to 2000 as all data records of the buffer have to be processed for each new measured value.

Range of values	0..1
Initial value:	0

Command DF

<id>DF<para5>	Set initial values (Default values)
Access:	User mode
Description:	Sets all parameters to their initial value. After this command all parameters of the ULTRASONIC are written to their initial value. ATTENTION: The values in the EEPROM are not overwritten. After a restart the ULTRASONIC reads out the 'old' parameters from the EEPROM.

Parameter description:

1: Sets all parameters to the initialisation value

Range of values	1
Initial value:	No initial value

Command DM

<id>DM<para5>	Duplex mode
Access:	User mode
Description:	Duplex mode decides the type of physical connection. In full duplex mode the send and receive signals are each transmitted via separate pairs of cables. This means it is possible to send and receive signals as required. In half duplex mode transmission of the send or receive signals is via the same pair of cables: Depending on the setting there are restrictions on the function of the connector PINs of the ULTRASONIC: see **Command AA Command AB, Command AC, Command TT, Serial data output, 7.1.1 Duplex mode**

It is only possible to switch from full duplex to half duplex mode with the following prerequisites:

- No independent telegram output (TT0000)

It is only possible to switch from half duplex to full duplex mode with the following prerequisites:

- The pins WV/RXD- and WD/RXD+ must not be switched as analog inputs / analog outputs: see **Command AA** and **Command AB**

Parameter description:

0: half duplex mode
1: full duplex mode (RS 485 line transmitters are deactivated when no data are transmitted)
2: Full duplex mode (RS 485 line transmitters are not deactivated)

Range of values	0..2
Initial value:	1

Command EI

<id>EI<para5>	Analog value in case of error (Error Inversion)
Access:	User key
Description:	Specifies whether 0 or maximum value is output at the analog outputs in the case of error. If the ULTRASONIC establishes a static error during a measurement, it will output an error under certain conditions. This output is designed to prevent the user from interpreting incorrect measured values. If the analog signals of wind direction and

wind velocity are used for evaluation, the ULTRASONIC switches the outputs to the maximum or minimum output value in the case of error. This parameter is used to specify whether the minimum or maximum value is output in the case of error.

Parameter description:

0: Analog outputs are set to maximum in the case of error
1: Analog outputs are set to 0 in the case of error
2: In case of error the analogue output of the wind speed is set to 0
In case of error the analogue output of the wind direction is set to maximum

The output in the case of error does not depend on parameter SC: see **Command SC.** Either 0 or maximum is output in the case of error.

Range of values 0..1
Initial value: 0

Command FB

<id>FB<para5> Fast Boot
Access: User mode
Description: The ULTRASONIC is equipped with a boot loader that is called up automatically on startup of the instrument. The function of the boot loader is to load a new program into the memory of the ULTRASONIC. For this purpose the boot loader transmits a specific character string via the RS485 and waits for an appropriate response. If the instrument receives a valid response, the program update starts.
The command FB can be used to order the ULTRASONIC to bypass the boot loader on the next startup. In this case no attempt is made to initiate an update via the RS485. This means that the ULTRASONIC starts its main program more quickly.
Startup behaviour is influenced with the parameter FB.

Parameter description:

0: Fast boot switched off. The main program starts after approx. 5 seconds on restart.
1: Fast boot switched on. On system start-up the first data telegram is available after 200ms (averaging switched off).
2: The boot loader suppresses the output of the start parameter at 9600Baud (from Boot loader- version V1.43)

Range of values 0..2
Initial value: 0

Command GU

<id>GU<para5> Maximum value in the averaging buffer (gust acquisition)
Access: User mode
Description: When using mean value buffers, with this parameter the maximum wind velocity and the respective wind direction (gust) can be acquired in the mean value buffer. The value of the command GU indicates the time length of the gust in 100ms-increments. The gust acquisition is deactivated through GU00000..
For this, see also section **7.3.4**

Parameter description:

0: gust acquisition deactivated.
>0: Gust acquisition activated. The length of the gust must be less than the preset averaging period.

Example:

AV00003

GU00030
The instrument acquires the maximum gust in the gliding mean value buffer (here 1 minute). The gust value is the mean value from 3 seconds. All values in the averaging buffer are checked gradually. The acquisition of the gust is carried out after each measurement.

Value range: 0..30
Initial value: 0

Command HT

<id>HT<para5> Heating control (Heating)
Access: User mode
Description: To prevent freezing-up the ULTRASONIC is equipped with an effective heating system that heats the sensor arms and the sensor heads directly if necessary. The command HT can be used to influence the heating function. It is a basic rule that heating is switched on clocked. The basis for this is a pulse duration of 100ms. On startup the ratio between switched-on heating to switched-off heating is 1:100. After every further 100ms this ratio shifts 5ms towards switched-on heating. After 2 seconds the heating is completely on.

Time after switch-on[ms]	Time heating on	Time heating off
0	1	99
100	6	94
200	11	89
...	...	...
1900	96	4
2000	Completely on	

Table 12: Pulse control factor with switch-on of heating

Parameter description:

0: heating always off
1: heating software-controlled
2: heating always on

If the heating is software-controlled, it is switched under the following conditions:

Reason for switch-on	Condition for switch-off
The ULTRASONIC cannot pick up a valid measured value in a period > 3sec.	When valid values are measured and after another 10sec.
The measured virtual temperature of an instantaneous value is < 2°C.	The measured virtual temperature of an instantaneous value is > 8°C.

Table 13: Conditions for software-controlled switching of heating

The temperature criterion for control of the heating is always derived from the last valid measured value and not from the current mean value.

In continuous operation the heating system is protected by temperature monitoring. If the temperature of the sensors exceeds approx.+40°C, the heating automatically switches off. If a threshold value is not attained, it switches back on.

Range of values 00000..00002
Initial value: 00001

Command ID

<id>ID<para5>	ULTRASONIC ID
Access:	User mode
Description:	This command is used to specify the ID of the ULTRASONIC when the parameter XI is set to 0: see **Command XI**. The ID is used in every telegram of the ULTRASONIC when the command interpreter 'THIES' is selected: see **Command CI.** After the ID has been changed, the ULTRASONIC immediately responds to the new identifier.

The ID 99 is a generic ID. The ULTRASONIC always responds to commands with the ID 99 (with the correct baud rate). The ID 99 must not be used in bus mode.

Example:

00KY00001	Open with user key
00ID00023	Change ID from 0 to 23
!23ID00023	ULTRASONIC acknowledges change
23DM	Interrogation of duplex mode with new ID
!23DM00000	Response from ULTRASONIC
23ID00000	Change ID from 23 to 0
!00ID00000	ULTRASONIC acknowledges change

Range of values	0..99
Initial value:	0

Command KY

<id>KY<para5>	Access mode (Key)
Access:	Enquiry mode
Description:	To change the parameters of the ULTRASONIC access authorisations are necessary for most commands. This prevents any accidental change in parameters. Access takes place on three levels:

- Enquiry mode
- User mode
- Configuration mode

Parameter description:

0: Enquiry mode
Parameters which have no access restrictions are those not stored in the EEPROM, e.g. cyclic telegram enquiry or output of system status.

1: User mode (USER ACCESS)
The user key protects parameters which influence the behaviour of the ULTRASONIC, e.g. averaging period and baud rate. The user can change these parameters but he must realise that a change will alter the behaviour of the ULTRASONIC. Before every change it is recommended using the command SS to output and save the current configuration.

234: Configuration mode (CONFIG ACCESS)
Parameters protected with this key should not be changed. They are partly set on adjustment of the instrument at the factory. If these parameters are misadjusted, full malfunction may result. For the sake of completeness these parameters are included in this documentation although they should not be changed.

After a restart the system is always switched to the enquiry mode. If a command is entered incorrectly or an invalid command input, the ULTRASONIC immediately sets the access mode to the enquiry mode.

Range of values	0;1; 234
Initial value	0

Command MA

<id>MA>>para5>	Automatic adjustment of measured value acquisition (Measurement Automation)
Access:	Configuration mode
Description:	Specifies whether the measuring interval MA is automatically changed when an incorrect measurement is identified: see **Command MA.**? MD

Parameter description:

0:	An incorrect measured value identified during the plausibility check has no influence on the interval for the acquisition of measured values.
1:	An incorrect measured value identified during the plausibility check causes the measuring interval to be set to the selected value and measurement performed with this frequency in the case of error. With error the parameter MA replaces the measured value interval selected using the parameter MD. If MD and MA have the same value, the measuring speed does not change in the case of error. The measuring interval is reset when 4 consecutive data records contain no error.

Range of values	0..100
Initial value	1

Command MD

<id>MD>>para5>	Measuring interval (Measurement Delay)
Access:	Configuration mode
Description:	Specifies the time in ms waited between two ultrasonic pulses. The ULTRASONIC is designed so that it cyclically measures the path run times of the individual paths. The parameter MD specifies how long the period between two ultrasonic pulses is. In standard mode this time is 5ms, so that every 20ms a complete data record is made from all sensors. If the ULTRASONIC identifies an incorrect measurement, the value MD can be set to 0, i.e. the send pulses directly follow each other: see **Command MA.** If for example a sensor is blocked, the change in MD is identified by the higher sound frequency given off by the ULTRASONIC.

Range of values	0..1000
Initial value:	00005

Command NC

<id>NC<para5>	Correction to north (North Correction)
Access:	User mode
Description:	With North correction a constant angle is also added to the measured angle. This value is used to correct a known angle error. If the ULTRASONIC is for example not aligned directly to north but to north-east, the wind direction will always show 45° too little. In this case a north correction of 45 must be selected. North correction affects the values in the data telegrams as well as the analog output values.

Range of values	0..360 in 1° steps
Initial value:	00000

Command OD

<id>OD<para5> Emulation of ULTRASONIC 1D (One Dimension)
Access: User key
Description: This parameter is used to specify whether the ULTRASONIC is to behave as a 1D-variant. If the parameter = 1, only the velocity component in a north/south direction is used to determine the velocity. The parameter takes the setting NC into account. When using OD00001 it is recommended setting north correction to NC00045 and mounting the ULTRASONIC at a 45° angle to the main wind direction.
The angle output with the 1D variant is 0 (no wind), 1°, and 181°.

Range of values 0: Standard two dimensional
1: 1D emulation
Initial value: 00000

Command OR

<id>OR<para5> Telegram output interval (Output Ratio)
Access: User key
Description: With independent telegram output this parameter is used to specify the time interval in which telegrams are output via the serial interface. Specification is made in milliseconds. If the output speed is higher than the data can be transmitted, the available output is discarded. If the output is faster than acquisition of the measured values, the measured values available are output again.
If the averaging period is 0ms (see Command AV), the averaging period is automatically adapted to the output interval regardless of whether independent telegram output is selected.
Independent telegram output is only possible in full duplex mode.
See also **7.4.2 Independent telegram *output*, Command TT, Command DM**

Parameter description:

0: A telegram is always output when the internal acquisition of measured values has calculated a new data record.
1..60000 Gives the output interval in milliseconds.

Range of values 0..60000 [ms]
Initial value: 00100

Command OS

<id>OS<para5> Scaling of wind velocity output (Output Scale)
Access: User mode
Description: This command is used to specify in which unit of measurement the wind velocity is output in the serial telegram. Different units of measurement are available for this purpose.

Parameter description:

Parameter	Unit of measurement	Conversion factor related to m/s
0	m/s	1
1	km/h	1m/s => 3.6 km/h
2	miles/h	1m/s => 2.236936292 miles/h
3	knots	1m/s => 1.94253590 kn

Table 14: Conversion factors between different wind velocities

Range of values 0..3
Initial value: 0

Command PC

<id>PC<para5>	Plausibility test (Plausibility check)
Access:	Configuration mode
Description:	Switches the plausibility checks on/off. Every complete measured value is checked when Plausibility is switched on. It is checked whether the measured value is internally plausible and whether it fits into the sequence of measured values acquired. If this is the case, it is released for further processing. If this is not the case, the measured value is discarded. In the standard configuration this has the following effects: • The heating is switched on: see **Command HT** The measured value acquisition interval is set to 0: see **Command MD**
Range of values	0..7
Initial value:	7

Command PR

<id>PR<para5>	Periodic receive time (Receive Time)
Access:	Configuration mode
Description:	This value sets the receive time period in the serial register in the analog section of the ULTRASONIC. This value must not be changed under any circumstances. It is factory-set.
Range of values	13..99
Initial value:	39
Unit:	100ns

Command PT

<id>PT<para5>	Periodic transmit time (Period Transmit Time)
Access:	Configuration mode
Description:	The value sets the transmit time period in the serial register in the analog section of the ULTRASONIC. This value must not be changed under any circumstances. It is factory-set.
Range of values	13..99
Initial value:	00039
Unit:	100ns

Command RD

<id>RD<para5>	Response delay
Access:	Configuration mode
Description:	The command delays the response, after a command via the serial interface, by the mentioned time in ms.
Range of values:	0...1000
Initial value:	5
Unit:	ms

Command RF

<id>RF<para5>	Restart with static error (Restart measfail)
Access	User mode
Description	The command gives a time interval after which the instrument carries out a restart, when no valid data have been measured. If the value is set, for ex., to 60, a restart is carried out in case no valid measuring value has been acquired for 60 seconds If the value is set to zero, no restart is carried out in case of mismeasurement.
Value range:	0 ; 10...60000
Initial value:	60
Unit:	Seconds

Command RS

<id>RS<para5>	Restart ULTRASONIC (Reset)
Access:	User mode
Description:	With transmission of this command the ULTRASONIC watchdog is no longer operated. This results in a cold start after approx. 2sec. The ULTRASONIC performs a complete restart.

Parameter description:

1:	The ULTRASONIC performs a cold start. It behaves as after connection of the supply voltage.

Range of values	00001
Initial value:	No initial value

Command SH

<id>SH<para5>	Serial number (High Word) (Serial number High word)
Access:	Configuration mode
Description:	During factory adjustment of the ULTRASONIC every ULTRASONIC is given a serial number. This serial number allows the ULTRASONIC to be clearly identified. Storage of the serial number is divided up into high and low bytes. The serial number must not be changed.
Range of values	0..65535

Command SL

<id>SH<para5>	Serial number (Low Word) (Serial number Low word)
Access:	Configuration mode
Description:	During factory adjustment of the ULTRASONIC every ULTRASONIC is given a serial number. This serial number allows the ULTRASONIC to be clearly identified. Storage of the serial number is divided up into high and low bytes. The serial number must not be changed.
Range of values	0..65535

Command SC

<id>SC<para5> Minimum value of analog outputs (Start Current)
Access: User key
Description: When using analog outputs the minimum value to be output can be selected. This does not influence the terminal value of the outputs. The minimum value is 0% or 20% of the terminal value. Depending on the parameter AN the selected minimum value is converted to a current or voltage value. This provides for current and voltage outputs with 0..20mA, 4..20mA, 0..10V, and 2..10V: see **Command AN**
See also: **Command AA, Command AB**

Parameter description:

0: Minimum value 0% of maximum value
1: Minimum value 20% of maximum value

Together with the parameter AN the analog outputs can be configured as follows:

	Parameter SC=0	Parameter SC=1
Parameter AN=0	0..10V	2..10V
Parameter AN=1	0..20mA	4..20mA

Parameter AA= 0; AB = 0

Table 15: Configuration of analog outputs WV/RXD- and WD/RXD+ with parameters AN and SC

Range of values 0..1
Initial value: 0

Command SS

<id>SS<para5> System status (System Status)
Access: Enquiry mode
Description: Outputs the selected parameters of all commands. All parameters stored in the EEPROM are output here.
Before parameters of the ULTRASONIC are changed, this command should be used to generate and save a list of the selected parameters, e.g. by copying parameters to a text file.

Parameter description:
No parameter is necessary when using the command SS. Callup with selected instrument - ID 00 is as follows:
00SS<cr> with <cr> Carriage return (Enter key)

Range of values No value range
Initial value: No initial value

Command SV

<id>SV<para5> Software version (Software Version)
Access: Enquiry mode
Description: This command reads out the current software version and gives it back. For interpretation the version output must be divided by 100. The output value 00SV00123 represents version V1.23.
'1' means the main version, 23 is the build label. The build label is changed when available functions have been changed. The version changes when new functions have been added.

Command TC

<id>TC<para5>	Temperature correction (Temperature correction)
Access:	Configuration mode
Description:	When measuring the acoustic virtual temperature the orthogonal wind component to the measured section lengthens the acoustic path, and thus results in a too lowly calculated acoustic virtual temperature. The orthogonal wind artificially lengthens the propagation time of the ultrasound, ultimately resulting in corruption of an acoustic virtual temperature. Parameter TC is used to take account of the crosswind component and to correct the acoustic virtual temperature.

Parameter description:

	0:	correction deactivated
	1:	correction activated
Range of value:	0...1	
Initial value:	1	

Command TE

<id>TE<para5>	Propagation time delay east sensor (Sensor delay EAST sensor)
Access:	Configuration mode
Description:	Instrument-dependent delay time of sensor. This parameter is set on factory adjustment and must not be changed.
Range of values	0..FFFh
Initial value:	215

Command TN

<id>TN<para5>	Propagation time delay north sensor (Sensor delay NORTH sensor)
Access:	Configuration mode
Description:	Instrument-dependent delay time of sensor. This parameter is set on factory adjustment and must not be changed.
Range of values	0..FFFh
Initial value:	215

Command TR

<id>TR<para5>	Telegram request (Transmit request)
Access:	Enquiry mode
Description:	The command TR is used to specifically request a telegram from the ULTRASONIC. After interpretation the ULTRASONIC sends back the requested telegram. The instrument specifies a series of predefined telegrams, as well as option for the user to configure his own telegram: see Fixed telegram formats, User-specific telegram. In half duplex mode the command TR is the sole option for requesting measured values via the RS485 interface. The response time of the ULTRASONIC with a telegram request is defined as follows: The time interval after receipt of the last character until transmission of the first character of the response telegram is also < 1ms with standard deviation switched on (measured at RXD+ and TXD+ of RS485).

Parameter description:

1:	VD telegram (wind velocity, wind direction)
2:	VDT telegram (wind velocity, wind direction, virtual temperature)
3:	V4DT telegram (wind velocity, wind direction, virtual temperature)
4:	NMEA V2.0
5:	VDT with standard deviation values
6:	User-defined telegram
7:	Velocity components Vx and Vy
8:	VD Telegram Variant 1
9:	VDT Telegram Variant 1
10..13:	reserved
12:	Scientific diagnostic telegram

Range of values 1..13
Initial value: No initial value

Command TT

<id>TT<para5> Independent telegram output (Transmit Telegram)
Access: User mode
Description: Specifies the number of the telegram that the ULTRASONIC independently transmits on a cyclic basis. The same telegrams are available as described under **Command TT.** The time interval in which telegrams are transmitted is specified with the **Command OR.**
Independent transmission is only possible in full duplex mode: see **Command DM.**
If TT = 0, independent telegram output is switched off.

Range of values 0..13
Initial value: 0

Command TS

<id>TS<para5> Propagation time delay south sensor (Sensor delay SOUTH sensor)
Access: Configuration mode
Description: Instrument-dependent delay time of sensor. This parameter is set on factory adjustment and must not be changed.

Range of values 0..FFFh
Initial value: 215

Command TW

<id>TW<para5> Propagation time delay west sensor (Sensor delay WEST sensor)
Access: Configuration key
Description: Instrument-dependent delay time of sensor. This parameter is set on factory adjustment and must not be changed.

Range of values 0..FFFh
Initial value: 215

Command UA

<id>UA<para5>	Addition of definitions to user-defined telegram (Add User telegram item)
Access:	Enquiry mode
Description:	In the user-specific telegram this command can be used to add a new definition to the end of the telegram: see, User-specific telegram, **Command US**. The data generated can be interrogated using the command TR00006 or TT00006: see also **Command TR, Command TT**
Range of values	Character string
Initial value:	No initial value

Command UR

<id>UR<para5>	Deletion of one or more definitions at the end of the user-defined telegram (Remove User telegram item)
Access:	Enquiry mode
Description:	This command can be used to delete one or more definitions from the end of the user-defined telegram. The ULTRASONIC internally splits the character strings given to it into separate definitions. For example, the output of a variable is always an independent definition. This command can be used to delete definitions step by step: see also User-specific telegram, **Command US.** The data generated can be interrogated using the command TR00006 or TT00006: see also **Command TR, Command TT**

Parameter description:

0..30	Number of definitions to be deleted at the end of the user-specific telegram.

Range of values	0..30
Initial value:	No initial value

Command US

<id>US<para5>	Save user-specific telegram definition (User telegram Save)
Access:	User mode
Description:	This command can be used to store the current definition of the user-specific telegram in the EEPROM. All changes made with the commands UA, UR and UT are not permanently saved. The command US is used to store definitions in the EEPROM. The data generated can be interrogated using the command TR00006 or TT00006: see also **Command TR, Command TT**

Parameter description:

2:	Saves the telegram definition in the internal EEPROM.

Range of values	2
Initial value:	No initial value

Command UT

<id>UT<para5>	User-specific telegram (User Telegram)
Access:	Enquiry mode
Description:	This command can be used to create a new definition of the user-specific telegram. Any existing definition is overwritten: see also User-specific telegram, **Command US.** The data generated can be interrogated using the command TR00006 or TT00006: see **Command TR, Command TT**
Range of values	Character string
Initial value:	No initial value

Command VC

<id>VC<para5>	Constant velocity correction (Velocity Correction)
Access:	Configuration mode
Description:	Specifies the factor used to correct the velocity. Specification is made "per mil". This factor must not be changed.
Range of values	0..2000
Initial value:	1055

Command VT

<id>VT<para5>	Angle-dependent velocity correction (Velocity Table)
Access:	Configuration mode
Description:	Switches the calculation on/off which corrects the wind velocity as a function of wind direction.

Parameter description:

0:	Switches correction off
1:	Switches correction on

Range of values	0..1
Initial value:	1

Command XI

<id>XI<para5>	External ID (External ID)
Access:	User mode
Description:	When set, the instrument ID is determined via the external lines WV/RXD- (BIT 0) , WD/RXD+ (BIT 1) and ADIO (BIT 2). Here the channels must be configured accordingly. See **Command AA, Command AB, Command AC** On start-up the ULTRASONIC reads in the ID and stores it in the EEPROM. Reprogramming of the ID is output via the RS485 as a command sequence on start-up. If the parameter is set to 0, the ULTRASONIC reads its ID out from the internal EEPROM.

Parameter description:

0:	ULTRASONIC reads ID from internal EEPROM
1:	ULTRASONIC reads ID from external lines

Range of values	0..1
Initial value:	0

11 Appendix 1 Predefined data telegrams

11.1 Telegram 00001 VD

Wind speed and wind direction

Command: TR00001 Command: TT00001

Construction of telegram:
VD (STX)xx.x xxx*xx(CR)(ETX)

CH. NO.	Function
1	STX (HEX 02)
2	10^1 wind velocity
3	10^0 wind velocity
4	. (HEX 2E) decimal point
5	10^{-1} wind velocity
6	Blank character (HEX 20)
7	10^2 wind direction
8	10^1 wind direction
9	10^0 wind direction
10	* (HEX 2A) checksum identifier
11	High byte checksum in HEX (2..9)
12	Low byte checksum in HEX (2..9)
13	CR (HEX 0D) Carriage return
14	ETX (HEX 03)

Telegram output in case of error

CH. NO.	Function
1	STX (HEX 02)
2	'F'
3	'F'
4	. (HEX 2E) decimal point
5	'F'
6	Blank character (HEX 20)
7	'F'
8	'F'
9	'F'
10	* (HEX 2A) checksum identifier
11	High byte checksum in HEX (2..9)
12	Low byte checksum in HEX (2..9)
13	CR (HEX 0D) Carriage return
14	ETX (HEX 03)

11.2 Telegram 00002 VDT

Wind speed, wind direction, acoustic-virtual temperature

Command: TR00002 command: TT00002

Construction of telegram:
(STX)xx.x xxx xxx.x xx*xx(CR)(ETX)

CH. NO.	FUNCTION
1	STX (HEX 02)
2	10^1 wind velocity
3	10^0 wind velocity
4	. (HEX 2E) decimal point
5	10^{-1} wind velocity
6	Blank character (HEX 20)
7	10^2 wind direction
8	10^1 wind direction
9	10^0 wind direction
10	Blank character (HEX 20)
11	+ or - sign
12	10^1 temperature
13	10^0 temperature
14	. (HEX 2E) decimal point
15	10^{-1} temperature
16	Blank character (HEX 20)
17	High byte status byte
18	Low byte status byte
19	* (HEX 2A) checksum identifier
20	High byte checksum in HEX (2..18)
21	Low byte checksum in HEX (2..18)
22	CR (HEX 0D) Carriage return
23	ETX (HEX 03)

Telegram output in case of error

CH. NO.	FUNCTION
1	STX (HEX 02)
2	'F'
3	'F'
4	. (HEX 2E) decimal point
5	'F'
6	Blank character (HEX 20)
7	'F'
8	'F'
9	'F'
10	Blank character (HEX 20)
11	+ or - sign
12	'F'
13	'F'
14	. (HEX 2E) decimal point
15	'F'
16	Blank character (HEX 20)
17	High byte status byte
18	Low byte status byte
19	* (HEX 2A) checksum identifier
20	High byte checksum in HEX (2..18)
21	Low byte checksum in HEX (2..18)
22	CR (HEX 0D) Carriage return
23	ETX (HEX 03)

11.3 Telegram 00003 V4DT

Wind speed, wind direction, acoustic-virtual temperature

Command TR00003 Command: TT00003

Construction of telegram:
(STX)xxx.x xxx xxx.x x xx*xx(CR)(ETX)

CH. NO.	FUNCTION
1	STX (HEX 02)
2	10^2 wind velocity
3	10^1 wind velocity
4	10^0 wind velocity
5	. (HEX 2E) decimal point
6	10^{-1} wind velocity
7	Blank character (HEX 20)
8	10^2 wind direction
9	10^1 wind direction
10	10^0 wind direction
11	Blank character (HEX 20)
12	+ or - sign
13	10^1 temperature
14	10^0 temperature
15	. (HEX 2E) decimal point
16	10^{-1} temperature
17	Blank character (HEX 20)
18	K, N, M, S = km/h, Knots, m/s, mph
19	Blank character (HEX 20)
20	High byte status byte
21	Low byte status byte
22	* (HEX 2A) checksum identifier
23	High byte checksum in HEX (2..21)
24	Low byte checksum in HEX (2..21)
25	CR (HEX 0D) Carriage return
26	ETX (HEX 03)

Telegram output in case of error

CH. NO.	FUNCTION
1	STX (HEX 02)
2	'F'
3	'F'
4	'F'
5	. (HEX 2E) decimal point
6	'F'
7	Blank character (HEX 20)
8	'F'
9	'F'
10	'F'
11	Blank character (HEX 20)
12	+ or - sign
13	'F'
14	'F'
15	. (HEX 2E) decimal point
16	'F'
17	Blank character (HEX 20)
18	K, N, M, S = km/h, Knots, m/s, mph

19	Blank character (HEX 20)
20	High byte status byte
21	Low byte status byte
22	* (HEX 2A) checksum identifier
23	High byte checksum in HEX (2..21)
24	Low byte checksum in HEX (2..21)
25	CR (HEX 0D) Carriage return
26	ETX (HEX 03)

11.4 Telegram 00004 NMEA

NMEA V 2.0

Command: TR00004 Command TT00004

Construction of telegram:
$WIMWV,xxx.x,R,xxx.x,N,A*xx(CR)(LF)

CH. NO.	FUNCTION
1	$ (HEX 24) dollar
2	W (HEX 57)
3	I (HEX 49)
4	M (HEX 4D)
5	W (HEX 57)
6	V (HEX 56)
7	, (HEX 2C) comma
8	10^2 wind direction
9	10^1 wind direction
10	10^0 wind direction
11	. (HEX 2E) decimal point
12	10^{-1} wind direction
13	, (HEX 2C) comma
14	R (HEX 52)
15	, (HEX 2C) comma
16	10^2 wind velocity
17	10^1 wind velocity
18	10^0 wind velocity
19	. (HEX 2E) decimal point
20	10^{-1} wind velocity
21	, (HEX 2C) comma
22	K, N, M, S = km/h, Knots, m/s, mph
23	, (HEX 2C) comma
24	A, V A = valid, V = invalid
25	* (HEX 2A) checksum identifier
26	High byte checksum in HEX (2..24)
27	Low byte checksum in HEX (2..24)
28	CR (HEX 0D) Carriage return
29	LF (HEX 0A) Line feed

Telegram output in case of error

CH. NO.	FUNCTION
1	$ (HEX 24) dollar
2	W (HEX 57)

3	I (HEX 49)
4	M (HEX 4D)
5	W (HEX 57)
6	V (HEX 56)
7	, (HEX 2C) comma
8	, (HEX 2C) comma
9	R (HEX 52)
10	, (HEX 2C) comma
11	, (HEX 2C) comma
12	K, N, M, S = km/h, Knots, m/s, mph
13	, (HEX 2C) comma
14	V (V = invalid)
15	* (HEX 2A) checksum identifier
16	High byte checksum in HEX (2..14)
17	Low byte checksum in HEX (2..14)
18	CR (HEX 0D) Carriage return
19	LF (HEX 0A) Line feed

11.5 Telegram 00005 VDT, Standard deviation

Standard deviation
When using the standard deviation the VDT telegram is extended by the standard deviation of the wind speed and wind direction.

Command: TR00005 Command: TT00005

Construction of telegram:
(STX)xx.x xx.x xxx xxx xxx.x xxx.x xx*xx(CR)(ETX)

CH. NO.	FUNCTION
1	STX (HEX 02)
2	10^1 wind velocity
3	10^0 wind velocity
4	. (HEX 2E) decimal point
5	10^{-1} wind velocity
6	Blank character (HEX 20)
7	10^1 wind velocity (standard deviation)
8	10^0 wind velocity (standard deviation)
9	. (HEX 2E) decimal point
10	10^{-1} wind velocity (standard deviation)
11	Blank character (HEX 20)
12	10^2 wind direction
13	10^1 wind direction
14	10^0 wind direction
15	Blank character (HEX 20)
16	10^2 wind direction (standard deviation)
17	10^1 wind direction (standard deviation)
18	10^0 wind direction (standard deviation)
19	Blank character (HEX 20)
20	+ or - sign
21	10^1 temperature
22	10^0 temperature
23	. (HEX 2E) decimal point
24	10^{-1} temperature
25	Blank character (HEX 20)
26	+ or - sign

27	10^1 temperature (standard deviation)
28	10^0 temperature (standard deviation)
29	. (HEX 2E) decimal point
30	10^{-1} temperature (standard deviation)
31	Blank character (HEX 20)
32	High byte status byte
33	Low byte status byte
34	* (HEX 2A) checksum identifier
35	High byte checksum in HEX (1..33)
36	Low byte checksum in HEX (1..33)
37	CR (HEX 0D) Carriage return
38	ETX (HEX 03)

Telegram output in case of error:

The telegram format corresponds to that of the data telegram with appropriate status value.

11.6 Telegram 00007 Vx, Vy, VT

Velocity components Vx und Vy

Command: TR00007 Command: TT00007

Construction of telegram:
(STX)xxx.x;xxx.x;xxx.x;xx;xx(CR)(ETX)

CH. NO.	FUNCTION
1	STX (HEX 02)
2	10^1 wind velocity
3	10^0 wind velocity
4	. (HEX 2E) decimal point
5	10^{-1} wind velocity
6	Blank character (HEX 20)
7	10^1 wind velocity (standard deviation)
8	10^0 wind velocity (standard deviation)
9	10^1 Wind speed Y
10	10^0 Wind speed Y
11	. (HEX 2E) decimal point
12	10^{-1} Wind speed Y
13	; (Semicolon)
14	+ or - sign
15	10^1 temperature
16	10^0 temperature
17	. (HEX 2E) decimal point
18	10^{-1} temperature
19	; (semicolon)
20	High Byte status byte
21	Low Byte status byte
22	; (Semicolon)
23	High Byte Check sum in HEX (1..22)
24	Low Byte Check sum in HEX (1..22)
25	CR (HEX 0D) Carriage Return
26	ETX (HEX 03)

Telegram output in case of error

CH.NO.	FUNCTION
1	STX (HEX 02)
2	+
3	F
4	F
5	. (HEX 2E) Dezimalpunkt
6	F
7	; (Semikolon)
8	+
9	F
10	F
11	. (HEX 2E) decimal point
12	F
13	; (Semicolon)
14	+
15	F
16	F
17	. (HEX 2E) decimal point
18	F
19	; (Semicolon)
20	High Byte status byte
21	Low Byte status byte
22	; (Semicolon)
23	High Byte Check sum in HEX (1..22)
24	Low Byte Check sum in HEX (1..22)
25	CR (HEX 0D) Carriage Return
26	ETX (HEX 03)

11.7 Telegram 00008 VD Variant 1

Wind speed and Wind direction Variant 1

Command: TR00008 Command: TT00008

Construction of telegram:
(STX)xx.x.xxx*(CRLF)(ETX)

CH. NO.	FunCtion
1	STX (HEX 02)
2	10^1 Wind speed
3	10^0 Wind speed
4	. (HEX 2E) Decimal point
5	10^{-1} Wind speed
6	Space (HEX 20)
7	10^2 Wind direction
8	10^1 Wind direction
9	10^0 Wind direction
10	* (HEX 2A) Check sum identification
11	High Byte Check sum in HEX (2..9)
12	Low Byte Check sum in HEX (2..9)
13	CR (HEX 0D) Carriage Return
14	LF (HEX 0A) Line feed
15	ETX (HEX 03)

Telegram output in case of error

CH.NO.	FunCtion
1	STX (HEX 02)
2	,F'
3	,F'
4	. (HEX 2E) Decimal point
5	,F'
6	Space (HEX 20)
7	,F'
8	,F'
9	,F'
10	* (HEX 2A) Checksum identification
11	High Byte Check sum in HEX (2..9)
12	Low Byte Check sum in HEX (2..9)
13	CR (HEX 0D) Carriage Return
14	LF (HEX 0A) Line feed
15	ETX (HEX 03)

11.8 Telegram 00009 VDT Variant 1

Only with model 4.3811.00.000

Wind speed, Wind direction, acoustic-virtual temperature, status and check sum (type 2)

Command: TR00009 Command: TT00009

Construction of telegram:
!iivvvdddtttttwfR

CH.NO.	Ch.Supply Function
1 (!)	**!** Return sign
2 (i)	**0 ••• 9** Instrument ID
3 (i)	**0 ••• 9** Instrument ID
4 (v)	**0 ••• 9** Wind speed * 10^{1}m/s
5 (v)	**0 ••• 9** Wind speed * 10^{0}m/s
6 (v)	**0 ••• 9** Wind speed * 10^{-1}m/s
7 (d)	**0 ••• 9** Wind direction * 10^{2} Grad
8 (d)	**0 ••• 9** Wind direction * 10^{1} Grad
9 (d)	**0 ••• 9** Wind direction * 10^{0} Grad
10 (t)	**+ ••• −** Sign
11 (t)	**0 ••• 9** Temperature * 10^{1} °C
12 (t)	**0 ••• 9** Temperature * 10^{0} °C
13 (t)	**0 ••• 9** Temperature * 10^{-1} °C
14 (w)	**ASCII** Status byte, see item 6.2.2
15 (f)	**ASCII** Check sum (type 2), see item 6.2.1
16 (R)	**0D** HEX Carriage Return

11.9 Telegram 00012 Scientific Telegram

Scientific Diagnostic Telegram

Command: TR00012 Command: TT00012

Construction of telegram:
WG;WR;VT;V13;V24;T13;T24;C13;C24;C31;C42;N1;N2;N3;N4;TS;TC

WG	Wind speed (7,2;)
WR	Wind direction (6,2;)
VT	Virtual temperature (6,2;)
V13	Speed of distance 13 (7,2;)
V24	Speed of distance 24 (7,2;)
T13	Virtual temperature of distance 13 (7,2;) (last measured value in averaging interval; -273,15 in case of no valid value)
T24	Virtual temperature of distance 24 (7,2;) (last measured value in averaging interval; -273,15 in case of no valid value)
C13	Measuring value run-time Converter 1 in direction Converter 3 (north- south direction) (5;)
C24	Measuring value run-time Converter 2 in direction Converter 4 (east- west direction) (5;)
C31	Measuring value run-time Converter 3 in direction Converter 1 (south- north direction) (5;)
C42	Measuring value run-time Converter 4 in direction Converter 2 (west- east direction) (5;)
N1	Internal counter (5;)
N2	Time interval, where the values are written into the main average memory (5;)
N3	Number of values in the main average memory (5;)
N4	THIES Status (2;)
TS	Telegram status , see **7.4.6.1 Generic status information**(hexadecimal display) (4;)
TC	Internal tick count in ms of the processor (7;\r\n)

Signification (7,2;) (x;y)
X=> Number of digits in the telegram
Y=> Number of decimal places

z. B. (7;2;)
0000.00;

12 Technical data

Wind velocity	Measuring range	0...65 m/s Scaling of analog output freely selectable	
	Accuracy	<= 5 m/s:	± 0,1 m/s (rms, mean over 360°)
		> 5 m/s:	± 2% of meas. value (rms, mean over 360°)
	Resolution	0,1 m/s:	In the telegrams 14.1 up to 14.6
		<0,1 m/s:	in the telegrams 14.7 and user-defined telegrams
Wind direction	Measuring range	0...360° 0...360° , 0... 540°, 0..720° for analogue output, adjustable	
	Accuracy	± 1.0°	
	Resolution	1°:	In the telegrams 14.1 up to 14.6
		< 1°:	In the telegrams 14.7 and user-defined telegrams
Virtual temperature	Measuring range	- 40 .... + 70 °C	
	Accuracy	± 0.5 K	
	Resolution	0.1 K (in the telegrams 14.1 to 14.6)	
Data output digital	Interface	RS 485 / RS 422	
	Baud rate	1200, 2400, 4800, 9600, 19200, 38400, 57600, 115200, 230400, 460800, 921600 adjustable	
	Output	Instantaneous values, wind velocity / direction and virtual temp. Sliding mean values 0.5sec..100min freely selectable Standard deviation for wind velocity /direction and virtual temp. Predefined data telegrams or user-defined data telegram	
	Output rate	1 per 1msec to 1 per 60 seconds adjustable	
	Status identification	Heating, failure of measurement path , ΔT path temperatures	
Data output analogue	Electr. output	0 ... 20 mA / 0... 10 V or 4... 20 mA / 2... 10 V only wind velocity and wind direction	
		Burden on current output maximum 400Ω	
		Burden on voltage output minimum 4000Ω	
	Output	Instantaneous values Sliding mean values 0.5sec..100min freely selectable	
	Output rate	Updating rate 1 per 100 msec	
	Resolution	12 bit	
Analogue inputs	Number	Up to three analog inputs possible	
	Resolution	12 bit	
	Sampling rate	100ms per channel	
	Resolution	0..9.96V	
	Data processing	Output of measured values in user-specific telegram	
	Accuracy	±1,0% of meas. value in the range –40°C ... +70°C	
General	Internal measuring rate	Up to 1500 measurements per second at 25 °C	
	Bus mode	Bus mode with up to 99 instruments possible	
	Program update	Program update possible in bus mode	
	Temperature range	Operating temp. - 40 ... + 70 °C Storage -50... +80°C	
	Operating voltage	Supply electronics, 12... 24 V AC/DC +-10%; approx. 3 VA (only with deactivated heating)	
		Supply heating, 24 V AC/DC +-15%: max. 70 VA	
	Protection type	IP 65 (with proper installation, see section "Preparation for	

		operation")
W/o US converter heating	Icing resistance	Acc. to THIES STD 012001
With US converter heating	Icing resistance	Acc. to THIES STD 012002
	EMC	EN 55022 5/95 class B; EN 50082-2 2/96
	Model	V4A stainless steel for housing and transformer arms
	Installation type	Mast tube 1½ ", e.g. DIN 2441
	Connection type	8-pole plug connection in shaft
	Weight	2.5 kg

13 Dimension Drawing

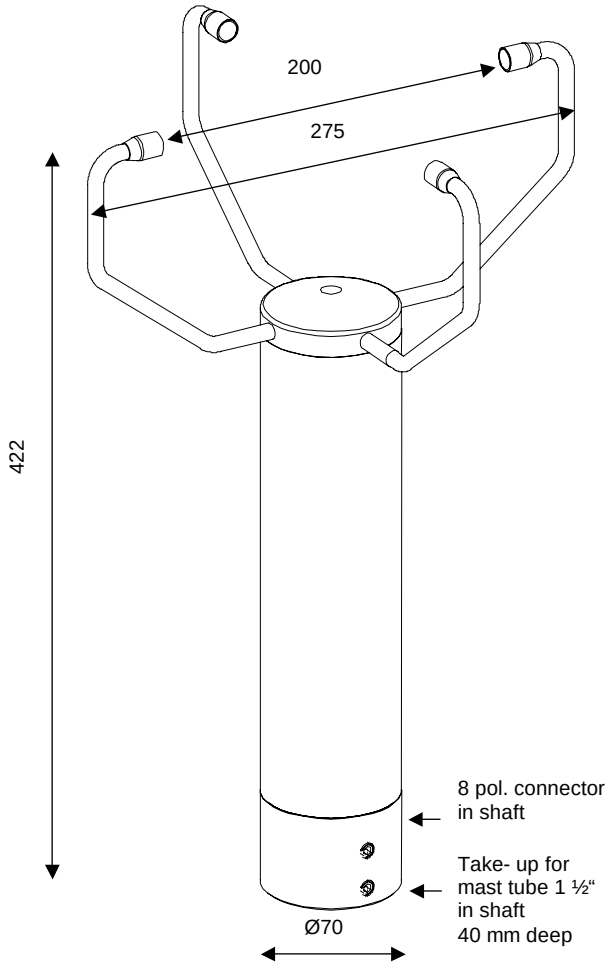

14 Accessories (available as optional features)

Connecting cable, complete	**507751**	15 m cable with socket outlet on transmitter side. The other end of the cable is equipped with core identification rings.
PC-Program Meteo-Online	**9.1700.98.000**	For graphical display of measured values on a PC
Power supply unit	**9.3388.00.000**	For power supply to the ultrasonic anemometer
Interface converter	**9.1702.xx.000**	For RS 422 signal conversion in RS 232
Lightning rod	**4.3100.99.150**	As lightning protection

Important:

Instruments must be returned in the original packaging; otherwise the warranty entitlement expires with mechanical damage, e.g. deformation of measuring arms.

ADOLF THIES GmbH & Co. KG
Hauptstraße 76 37083 Göttingen Germany
P.O. Box 3536 + 3541 37025 Göttingen
Phone ++551 79001-0 Fax ++551 79001-65
www.thiesclima.com info@thiesclima.com