THE WORLD OF WEATHER DATA - THE WORLD OF WEATHER DATA - THE WORLD OF WEATHER DATA

Instruction for Use

020905/08/07

Meteo comp

Combined Wind Transmitter 4.3329.00.000
Display Instrument 9.3229.00.000

ADOLF THIES GmbH & Co. KG
Hauptstraße 76 37083 Göttingen Germany
Box 3536 + 3541 37025 Göttingen
Phone ++551 79001-0 Fax ++551 79001-65
www.thiesclima.com info@thiesclima.com

Contents

1 Instruments

Order- No.	Description
4.3329.00.000	Combined Wind Transmitter
9.3229.00.000	Display Instrument
850 266	Wall power supply

2 Application

The **METEO comp** measurement system is designed to measure wind velocity, wind direction and the external temperature.

The measurement system features the following:

- Selection of the appropriate unit of measurement for wind velocity in m/s, km/h or Beaufort
- Selection of the unit of measurements for temperature in °C, °F or wind chill temperature
- Displays the min.-max. values of all the measurement units occurring within the preceding 24 hours.
- Output of parameter wind and temperature via serial interface (RS 232)

3 Functions

The METEO comp measurement system consists of the following components:
Combined wind transmitter, Display instrument, Plug power unit

The wind transmitter is quite compact, allowing simple mounting with minimal influence on the sensors.

The **wind velocity** is detected by cup anemometers. This value is measured once a second and actualized in the display. Moreover, the minimum and maximum values of the wind velocities are determined and saved over a gliding 24-hour time period. If the wind transmitter is not connected or the wind velocity sensor is defective, EEE will appear on the display.

Wind direction is detected by means of a wind vane. This value is measured once every 50 ms (20 Hz) and actualized on the display. If the wind transmitter is not connected or the wind direction sensor is defective, the LEDs **N, S, E, W** all light up simultaneously.

External temperature is detected by means of the NTC resistor which is integrated in the wind direction unit. This value is actualized once a second on the display. Moreover, the minimum and maximum values of the occurring temperatures are determined and saved over a gliding 24-hour period of time. If the wind transmitter is not connected or the temperature sensor is defective, EEE appears on the display.

The easy-to-read digital LED-measured data representation on the display adapts automatically to the brightness of the surroundings.

If the display of measured data is not required for a longer period of time, then the instrument can be switched to the sleep mode. This is done by pressing both keys simultaneously. You can return to the operating mode in the same way. The sleep mode does not influence the measurement respectively the determination of the min.-max. values.

3.1 Serial Interface

For output and processing of measured data by other systems (for example: PC) display instrument is equipped with serial interface RS232 (9 pol. – D-plug). Measured data of wind velocity (m/s), wind direction (engledegree) temperature (°C) will be distributed every second via this interface.

Following interface parameter are pre-selected:

8 data bit

no parity

1 stop bit

1200 Baud

3.1.1 Pin connection of 9-pol. D-plug

Pin	Function
2	RXD (not in use)
3	TXD
5	GND

3.1.2 Connecting diagram

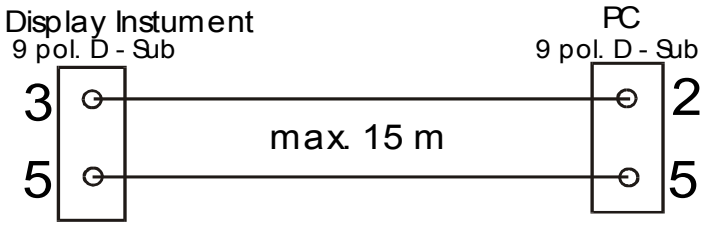

3.1.3 Data telegram [STX]xx.x xxx.x xxx.x[CR][ETX]

ZEICHEN NR.	FUNKTION
1	STX (HEX 02)
2	10^1 wind velocity (m/s)
3	10^0 wind velocity (m/s)
4	. decimal point
5	10^{-1} wind velocity (m/s)
6	space (HEX 20)
7	10^2 wind direction (angle degree)
8	10^1 wind direction (angle degree)
9	10^0 wind direction (angle degree)
10	. decimal point
11	10^{-1} wind direction (angle degree)
12	space (HEX 20)
13	- first sign
14	10^1 temperature (C degree)
15	10^0 temperature (C degree)
16	. decimal point
17	10^{-1} temperature (C degree)
18	CR (HEX 0C)
19	ETX (HEX 03)

4 Installation

4.1 Mechanische Montage

Combined Wind Transmitter:

> ***Attention:***
> ***Storing, mounting and operation under weather conditions is permissible only in vertical position, as otherwise water can get into the instrument.***

In order to obtain comparative values when the surface wind is measured, the wind transmitter should be set up in a flat, open area. It should preferably be mounted to a mast by means of a mounting pin with a diameter of 30 mm. After the combined wind transmitter has been placed onto the mast, align the mast hoop of the wind transmitter to North and attach it firmly to the mast by tightening the screws on the shaft.

Display Unit:

The display unit is designed for use in dry interior rooms. The instrument is operated preferably as wall unit.

To mount it to walls or other plane surfaces, two dowel pins 5 x 25 mm and two screws 4 x 30 DIN 96 (DIN =German Industrial Standards Code) or two self-tapping screws 3.5 x 32 DIN 7981 are required. Using a pass template, mark two points on the wall and then drill two 5 mm dowel pin holes

4.2 Electrical Mounting

Connect the *combined wind transmitter* with the integrated temperature sensor via the cable with the plug to the electronic display instrument. Electrical energy is supplied to the wind transmitter and the display unit by means of a plug power unit which has been connected to the display unit.

4.3 Operation Display Instrument

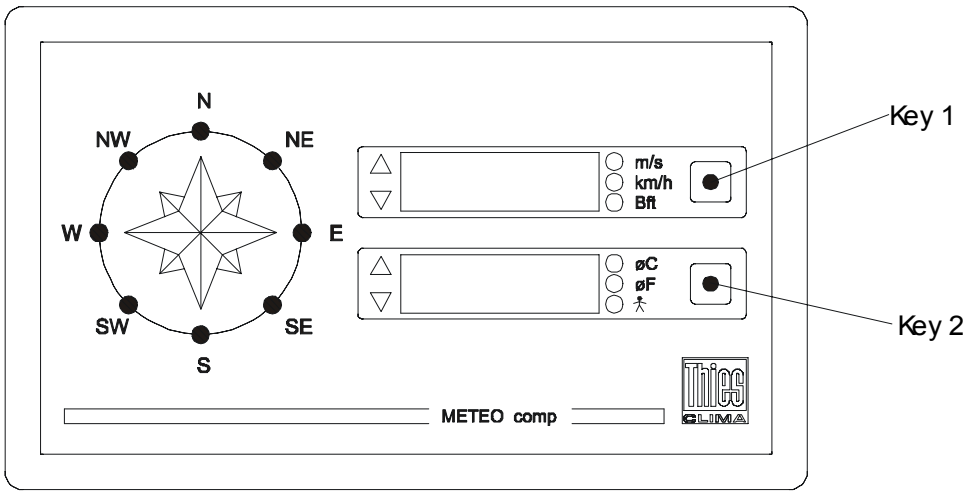

Wind Velocity:

In order to display the min. and max. values of wind velocity, press key 1 briefly (<2 seconds) as follows:
The first time you press key 1 ▼ appears on the display and the **minimum value** of the preceding 24 hours is displayed.
Press key 1 again briefly and a will appear on the display ▲ and the **maximum value** of the preceding 24 hours is displayed.
Pressing the key very briefly once again will return you to the **current value display**.

To select other **units** of measurement, press key 1 for more than 3 seconds.

λ m/s	○	○
○	λ km/h	○
○	○	λ Bft

External Temperature:

In order to display the min. and max. values of Temperature, press key 2 briefly (<2 seconds) as follows:
The first time you press key 2 ▼ appears on the display and the **minimum value** of the preceding 24 hours is displayed.
Press key 1 again briefly and a will appear on the display ▲ and the **maximum value** of the preceding 24 hours is displayed.
Pressing the key very briefly once again will return you to the **current value display**.

To select other **units** of measurement, press key 2 for more than 3 seconds.

λ °C	○	λ °C	○
○	λ °F	○	λ °F
○	○	λ W.Chill	λ W.Chill

To switch from the operating mode to the sleep mode, press both keys simultaneously.
Do the same to switch from the sleep mode to the operating mode.

5 Maintenance

After proper mounting the instruments works maintenance-free.
Heavy pollution can clog up the slit between the rotating and the stationary parts of the wind transmitter. This slit must be kept clean

6 Technical Data

Comb. Wind transmitter		
Wind velocity	Measuring range	1... 40 m/s
	Measuring principle	1 Reed contact / 2 magnets
	Output signal	Potential-free contact, type. 2,3 Hz / ms^{-1}
	Resolution	0,4 m wind run
Wind direction	Measuring range	0... 360°
	Measuring principle	Opto-electronic scanning of a code disc
	Output signal	0 V... 4,69 V = 0... 337,5 <° (Vcc = 5 V)
	Resolution	0,31 V = 22,5 degree
	Output resistance	approx. 10 kΩ
Temperature	Measuring range	- 30 ... + 60 °C
	Sensor	NTC 10 kΩ
	Measuring circuit	Voltage conductor
General	Operating temperature	-25... +60 °C (ice-free)
	Connection	Fix-connected cable 20 m with 6- pole modular plug on display side
	Voltage supply (Vcc)	5 V DC (supply is carried out from display instrument)
	Current consumption	3 mA
	Dimensions	See dimensional drawing
	Weight	1 Kg
	Mounting	Onto pipe socket Ø 30mm, and at least 30 mm length
	Protection	IP 54
Display Instrument		
Wind velocity	Display	99,9 (999)
	Resolution	0,1 m/s / 1 km/h / 1bft
	Scanning frequency	1 Hz
Wind direction	Display	N, NE, E, SE, S, SW, W, NW (0... 360°)
	Resolution	22,5 degree
	Scanning frequenxy	20 Hz
Temperature	Measuring range	- 30 ... + 40 °C
	Resolution	0,1° / 1°F
	Scanning frequency	1 Hz
Serial Interface	Type	RS232
	Setting	1200 baud, 8 data bit, no parity, 1 stop-bit

	Output cycle	1 sec (automatically)
	Output format	See data telegram
General	Display	LED, red
	Operating temperature	-20...+60 °C
	Voltage supply	9 V DC
	Current consumption	500 mA
	Dimensions	158 x 100 x 35 mm (BxHxT)
	Weight	0,25 Kg
	Mounting	Wall housing
	Protection	IP 20
Wall power supply		
	Primary	230 V / 50 Hz / 20 W
	Secondary	9 V
	Cable length	2 m
	Weight	0,2 Kg

7 Dimension diagram

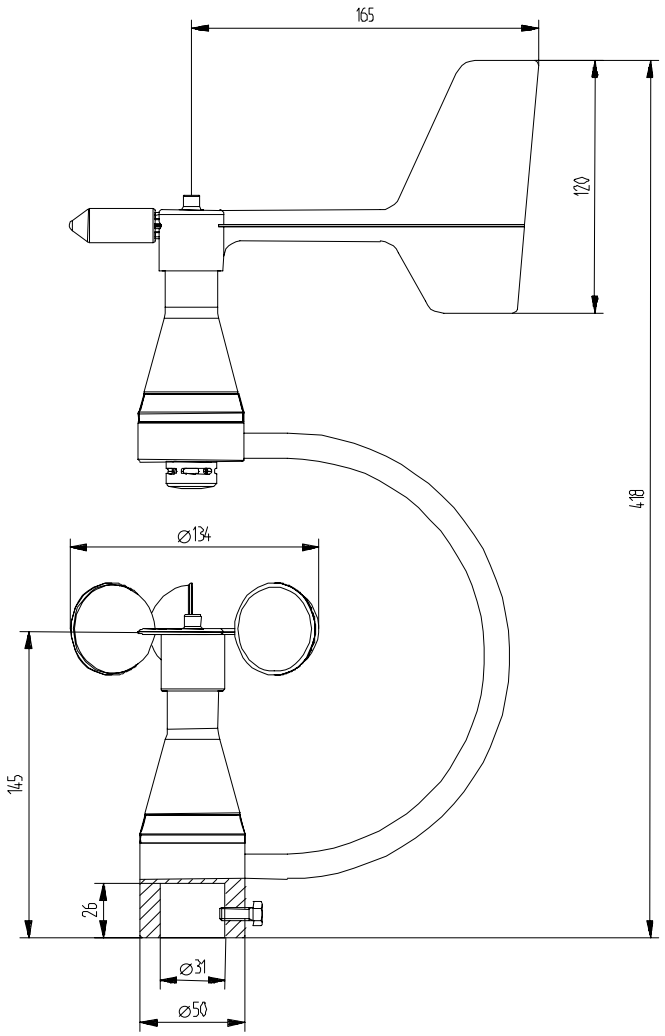

8 EC-Declaration of Conformity

Document-No.: **000690** Month: 06 Year: 08

Manufacturer: **A D O L F T H I E S G m b H & C o. K G**

Hauptstr. 76
D-37083 Göttingen
Tel.: (0551) 79001-0
Fax: (0551) 79001-65
email: Info@ThiesClima.com

Description of Product: **MeteoComp**

Article No. **4.3329.00.000** **4.3329.00.510** **9.3229.00.000**

specified technical data in the document: **020892/08/07; 021544/08/07**

The indicated products correspond to the essential requirement of the following European Directives and Regulations:

2004/108/EC DIRECTIVE 2004/108/EC OF THE EUROPEAN PARLIAMENT AND OF THE COUNCIL of 15 December 2004 on the approximation of the laws of the Member States relating to electromagnetic compatibility and repealing Directive 89/336/EEC

2006/95/EC DIRECTIVE 2006/95/EC OF THE EUROPEAN PARLIAMENT AND OF THE COUNCIL of 12 December 2006 on the harmonisation of the laws of Member States relating to electrical equipment designed for use within certain voltage limits

552/2004/EC Regulation (EC) No 552/2004 of the European Parliament and the Council of 10 March 2004 on the interoperability of the European Air Traffic Management network (the interoperability Regulation)

The indicated products comply with the regulations of the directives. This is proved by the compliance with the following standards:

Reference number	Specification
IEC 61000-6-2: 2005	Electromagnetic compatibility Immunity for industrial environment
IEC 61000-6-3: 2006	Electromagnetic compatibility Emission standard for residential, commercial and light industrial environments
IEC 61010-1: 2001	Safety requirements for electrical equipment for measurement, control and laboratory use. Part 1: General requirements

Place: Göttingen Date: 27.06.2008

Legally binding signature: issuer:

....

Wolfgang Behrens, General Manager Joachim Beinhorn, Development Manager

This declaration certificates the compliance with the mentioned directives, however does not include any warranty of characteristics.
Please pay attention to the security advises of the provided instructions for use.

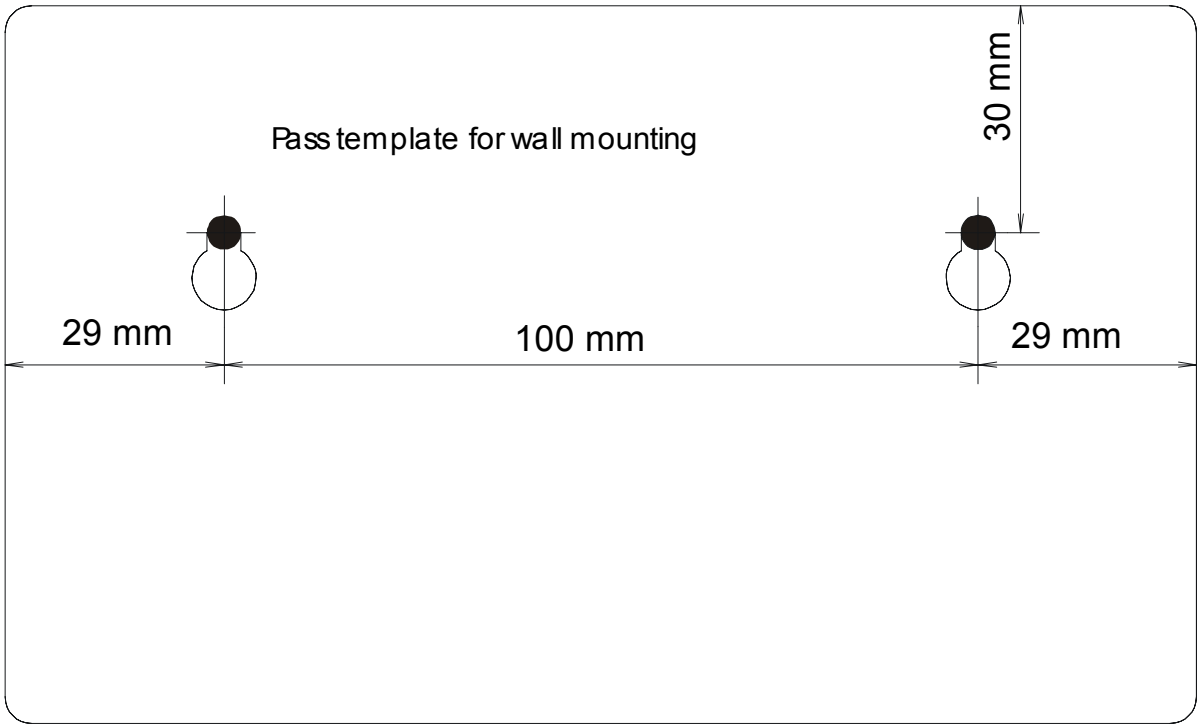

ADOLF THIES GmbH & Co. KG
Hauptstraße 76 37083 Göttingen Deutschland
P.O. Box 3536 + 3541 37025 Göttingen
Phone ++551 79001-0 Fax ++551 79001-65
www.thiesclima.com info@thiesclima.com