THE WORLD OF WEATHER DATA - THE WORLD OF WEATHER DATA - THE WORLD OF WEATHER DATA

Instruction for Use

020906/04/08

Wind Alarm Instrument 2

4.3241.0x.x0x

ADOLF THIES GmbH & Co. KG

Hauptstraße 76 37083 Göttingen Germany
Box 3536 + 3541 37025 Göttingen
Phone ++551 79001-0 Fax ++551 79001-65
www.thiesclima.com info@thiesclima.com

Contens

1 Models 2

2 Range of Application 3

3 Mode of Operation 3

4 Mounting 4
4.1 Mechanical Mounting 4
4.2 Electrical Mounting 4

5 Circuit Diagram 5
5.1 Comb. Circuit Diagram 6

6 Operation 7
6.1 Operating Elements 7
6.2 Setting the Operating Mode 8
6.3 Setting the Wind Alarm Threshold: 8
6.4 Switch-On Delay: 9
6.5 Switch-Off Delay: 9
6.5.1 Ausschaltverzögerung einstellen bei Gerät 4.3241.02.900: 10
6.5.2 Setting of Sensor Failure Monitoring Period with model 4.3241.02.900 10
6.6 Setting the Clock: 11
6.7 Status Display 11

7 Technical Data 12

8 Dimensional Drawins 12

9 EC-Declaration of Conformity 13

1 Models

Order Number	Supply Voltage	Supply for Transmitter-Heating	Sensor monitoring	Suitable Wind-Transmitter
4.3241.00.000	230 V AC	yes	no	4.3303.22.000 4.3519.00.000 4.3515.30.000 4.3515.50.000 4.3518.00.000 4.3520.00.000
4.3241.00.001	230 V AC	no	no	
4.3241.02.000	24 V AC/DC	yes	no	
4.3241.02.001	24 V AC/DC	no	no	
4.3241.02.900	24 V AC/DC	yes	yes	
4.3241.03.000	12 V AC/DC	no	no	4.3303.22.000 4.3519.00.000 4.3515.30.000 4.3515.50.000

2 Range of Application

Wind Alarm Instrument 2 is used in conjunction with a wind transmitter to initiate preventive measures to protect wind-endangered objects such as, for example, cranes, bridges, masts, greenhouses, window blinds and awnings.

3 Mode of Operation

The wind alarm is triggered by a "low-active" relay. If the wind velocity exceeds the pre-set value, the slow-releasing relay reacts following a time delay and triggers the alarm. If the pre-set value is not reached, the relay pulls up tightens after a time delay.
A rotary switch allows the selection of different Thies wind transmitters.
For wind transmitters with heaters, either wind alarm instrument 4.3241.00.000 or 4.3241.02.00, depending on the supply voltage, must be used.
The switch-on and switch-off delays prevent the relay from switching constantly when, for a short period of time, the switching point is exceeded or not reached. The delay times can be set on a rotary switch.

Sensor monitoring: only with model 4.3241.02.900
The sensor monitoring is an additional device; it activates the relay of the wind alarm instrument after 120 (60) minutes in case the wind transmitter impulses fail to appear. If an impulse is registered within the sensor monitoring period the sensor monitoring cycle re-starts.

Example of a Wind Alarm System:

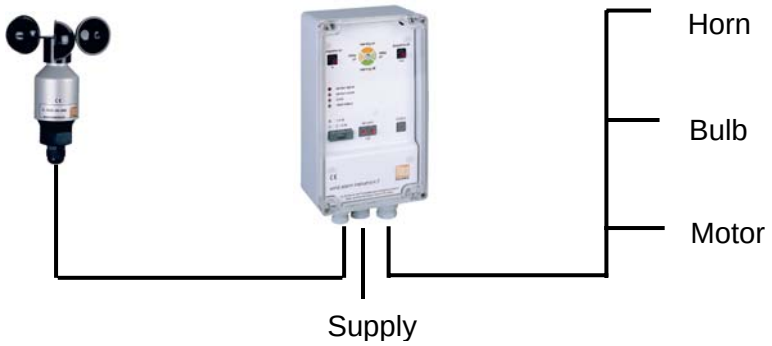

4 Mounting

***Please Note*:**

The electrical connection is to be carried out by experts only.
Please open the instrument <u>only</u> with dry ambient conditions.
Do not damage the exposed electronics!

4.1 Mechanical Mounting

The Wind Alarm Instrument 2 is designed to be mounted to walls in roofed-over rooms. To do this, first unscrew the transparent cover, revealing the four screw borings . Now mount the instrument to the wall by inserting 4 mm screws into these four borings.

4.2 Electrical Mounting

Connect the instrument electrically in accordance with the following circuit diagrams as appropriate for the wind transmitter being used. **This must be carried out by an electrician or some other expert.**

Remove the white front plate. Lead the connecting lines through the respective screw-type conduit fitting and connect as shown in the combination circuit diagram. The following recommendation applies for the operation of a wind transmitter with heating:

0,75 mm^2 cable lead cross section, max. 50 m length of lead

5 Circuit Diagram

Attention:

Circuit diagrams below shows the relay in "alarm off" position. The condition is valid when operating voltage is supplied to the wind warn unit and alarm set point is not reached.

Windwarngerät 2 / wind alarm instrument 2

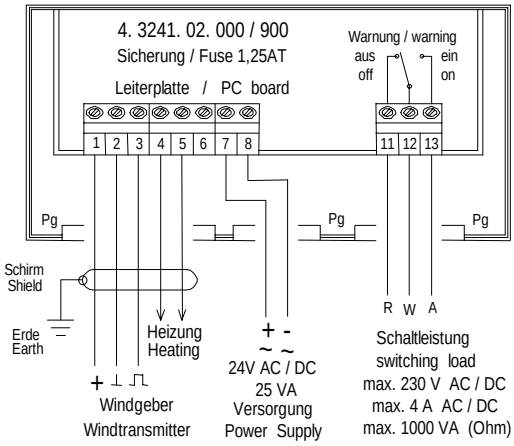

Windwarngerät 2 / wind alarm instrument 2

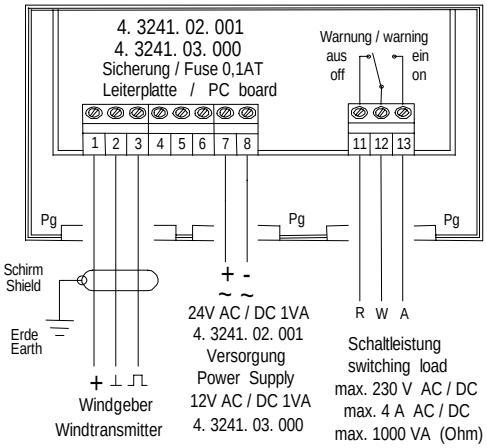

Windwarngerät 2 / wind alarm instrument 2

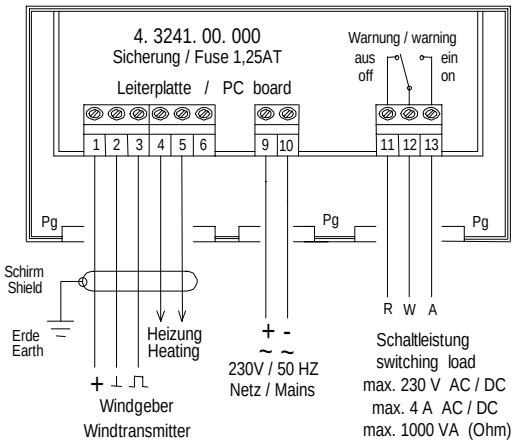

Windwarngerät 2 / wind alarm instrument 2

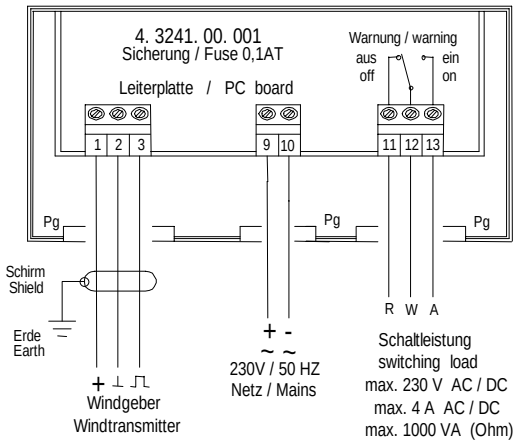

5.1 Comb. Circuit Diagram

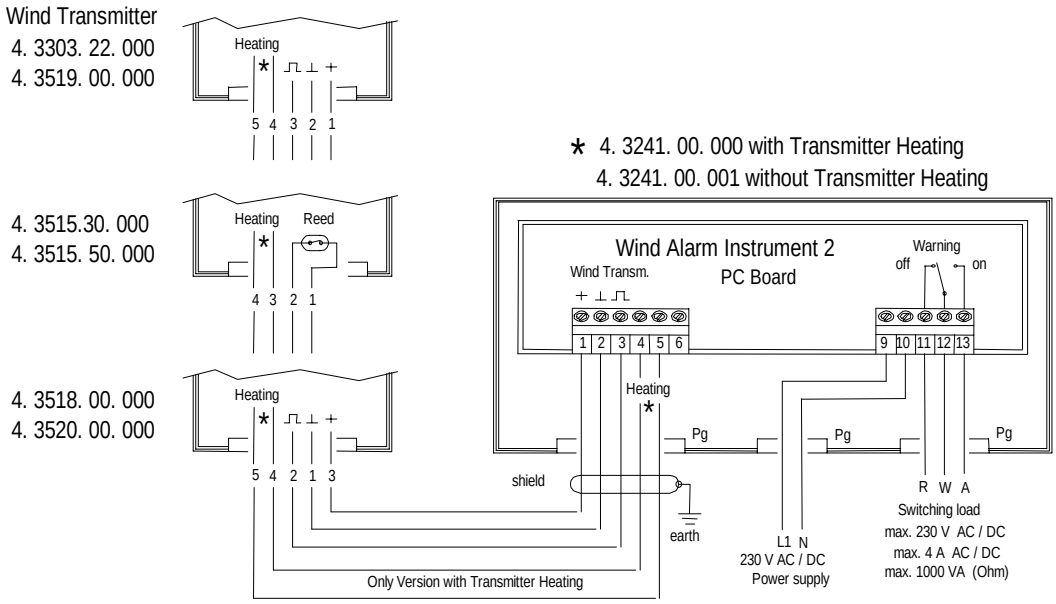

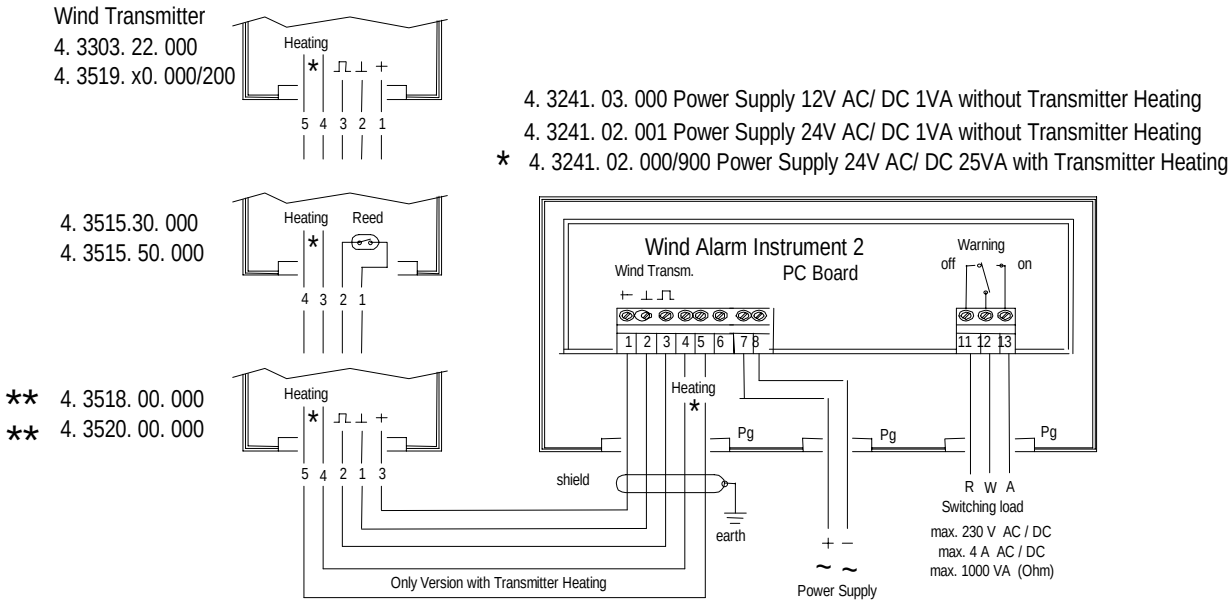

** Not in connection with 4.3241.03.000

6 Operation

6.1 Operating Elements

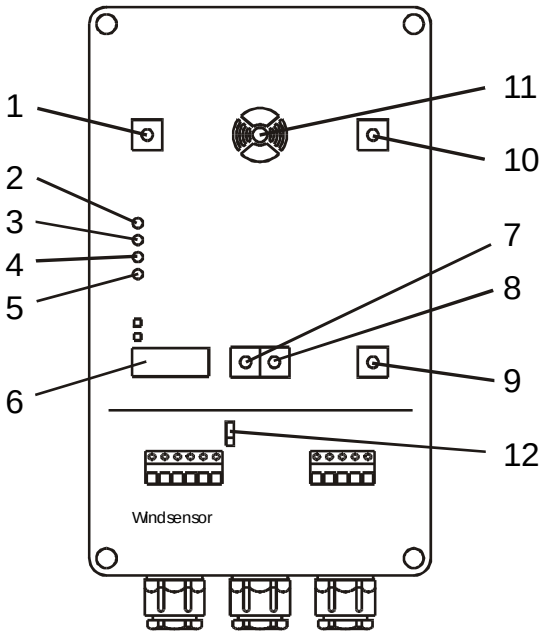

1. Rotary switch to select the switch-on delay
2. LED (Status display) „sensor signal“
3. LED (Status display) „ sensor power“
4. LED (Status display) „clock“
5. LED (Status display) „relay status“
6. Fuse (Ø 5 x 20)
7. Rotary switch to set the wind alarm threshold in the ten range
8. Rotary switch to set the wind alarm threshold in the unit range
9. Rotary switch (mode) to select the type of wind transmitter and the test function
10. Rotary switch to select the switch-off delay
11. LED wind alarm status
12. Jumper P1 to set the clock (under the front plate)

The white line marking on the axis is the reference point for the scale on rotary switches 1, 7, 8, and 10.

6.2 Setting the Operating Mode

Rotary **switch 9** is used to select the type of wind transmitter. This switch can also be used to switch on a self-test function.

Position of rotary switch **9**	Wind Transmitter - Type
0	4.3303.22.000
1	4.3515.50.000
2	4.3518.00.000 *
3	4.3520.00.000 *
4	4.3519.x0.000/200
5	4.3515.30.000
6	not assigned
7	not assigned
8	self-test
9	self-test

* Not in connection with 4.3241.03.000

When the rotary switch 9 is set to position 8 or 9, a self-test is carried out. For this an internal signal of 13 m/s is placed on the input. This allows the functioning of the wind alarm instrument to be tested by means of settings on the wind alarm threshold (value exceeded or not reached).

6.3 Setting the Wind Alarm Threshold:

The wind alarm threshold in the range between 1..39 m/s can be set with **rotary switches 7 and 8**.

Please Note:
The alarm is switched off for threshold values > 39 m/s!

Rotary switches 7 range of 10	**Rotary switches 8** range of 1	Alarm threshold
Position	Position	Depending on position
0 1 2 3	0 1 2 3 4 5 6 7 8 9	1 –39 m/s

Setting example:
D7 = **2** and D8 = **1** = Alarm threshold **21** m/s

6.4 Switch-On Delay:

Rotary switch 1 is used to set the switch-on delay of the wind alarm for the case when the wind alarm threshold is permanently exceeded. The delay time depends on the time cycle set on the clock and can be either 1...9 seconds or 2...18 seconds; Switch setting 0 is not allowable. When a 2 sec. cycle is selected, multiple the value set on the rotary switch by 2.

Rotary switch 1	Switch-on delay [seconds]	Switch-on delay [seconds]
Position	On time cycle: 1 second *	On time cycle: 2 seconds *)
1	1	2
2	2	4
3	3	6
4	4	8
5	5	10
6	6	12
7	7	14
8	8	16
9	9	18

* Setting of time cycle ref. to chapter 6.6

6.5 Switch-Off Delay:

Rotary switch 10 is used to set the switch-off delay of the wind alarm for the case when the wind alarm threshold is permanently not reached. The delay time depends on the time cycle set on the clock and can be either 1...9 minutes or 2...18 minutes; switch setting 0 is not allowable. When a 2 sec. cycle is selected, multiple the value set on the rotary switch by 2.

Rotary switch 10	Switch-off delay [seconds]	Switch-off delay [seconds]
Position	On time cycle: 1 second *	On time cycle: 2 seconds *)
1	1	2
2	2	4
3	3	6
4	4	8
5	5	10
6	6	12
7	7	14
8	8	16
9	9	18

* Setting of time cycle ref. to chapter 6.6

•

6.5.1 Ausschaltverzögerung einstellen bei Gerät 4.3241.02.900:

Rotary switch 10 is used to set the switch-off delay of the wind alarm for the case when the wind alarm threshold is permanently not reached. The delay time depends on the time cycle set on the clock and can be either 1...9 minutes or 2...18 minutes; switch setting 0 is not allowable. When a 2 sec. cycle is selected, multiple the value set on the rotary switch by 2.

Rotary switch 10	Switch-off delay [minutes]	Switch-off delay [minutes]
Position	On time cycle: 1 second *	On time cycle: 2 seconds *
1	8	16
2	16	32
3	24	48
4	32	64
5	40	80
6	48	96
7	56	112
8	64	128
9	72	144

* Setting of time cycle ref. to chapter 6.6

6.5.2 Setting of Sensor Failure Monitoring Period with model 4.3241.02.900

The sensor failure monitoring period can be set via the Jumper on the additional pc-board.:

Jumper K	
Position	Monitoring time [minutes)
K1 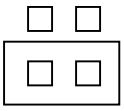	60
K2 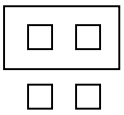	120 • Factory-setting

Remark:
A change of the sensor failure monitoring time should be effected only in the factory.

6.6 Setting the Clock:

The clock has been set to 1 second at the factory. If you want to change the time cycle to 2 seconds, then remove the white front plate and change jumper P1 as shown.

Jumper P1	
Time cycle: 1 second	Time cycle:2 seconds
2 ☐ 1 ☐ 3 ☐	2 ☐ 1 ☐ 3 ☐

After completion of all the mounting and setting tasks, replace the front plate and the transparent cover.

6.7 Status Display

The operating status of the instrument is indicated by 5 LEDs.

- Wind alarm status (LED 11 bi-colored) :

  green = threshold value not reached / Wind alarm off

  green/flashing = threshold value not reached / Wind alarm on *(AVF)

  red = threshold value exceeded / Wind alarm on

  red / flashing = threshold value exceeded / Wind alarm off *(EVZ)

  *AVZ = Switch-off delay

  *EVZ = Switch-on delay

- sensor signal

  LED 2 flashing / on = wind transmitter signal present

  LED 2 off = calm or wind transmitter defective

- sensor power

  LED 3 flashing / on = wind transmitter supply functioning

  LED 3 off = wind transmitter supply defective

  wind transmitter 4 3515.xx.xxx (Reed switch) not connected

  calm

- clock

  LED 4 flashing (2 Hz) = System clock functioning

  LED 4 off or on = System clock not functioning (instrument defective)

- relay status

  LED 5 on = Relay pulled up, Wind alarm off

  LED 5 off = Relay released, wind alarm on

7 Technical Data

Order- No.	4.3241.00.000 4.3241.00.001 4.3241.02.000 4.3241.02.001 4.3241.03.000	4.3241.02.900
Wind alarm range	1...39 m/s	1...39 m/s
Resolution	1 m/s	1 m/s
Measuring value input	Impulses	Impulses
Switch-on delay	1...9 s / 2...18 s depending on clock	1...9 s / 2...18 s depending on clock
Switch-off delay	1...9 min / 2...18 min depending on clock	8..72 min / 16...144 min depending on clock
Sensor monitoring	----------	120 min (factory-setting)
Clock	1 s / 2 s can be set	1 s / 2 s can be set
Time basis- accuracy	± 10%	± 10%
Relay output	throw-over switch, one-pole, potential-free	throw-over switch, one-pole, potential-free
Contact rating	24 V DC, 200 W	24 V DC, 200 W
	250 V DC, 100 W	250 V DC, 100 W
	max. 8 A, 1000 VA	max. 8 A, 1000 VA
Operating voltage	230 V AC or 24 V AC/DC see circuit diagram	24 V AC/DC
Ambient temperature	-25...+ 55°C	-25...+ 55°C
Type of protection	IP 65 in acc. with DIN 40050 (German Indus. Standards Code)	IP 65 in acc. with DIN 40050 (German Indus. Standards Code)
Weight	1 kg	1 kg

8 Dimensional Drawins

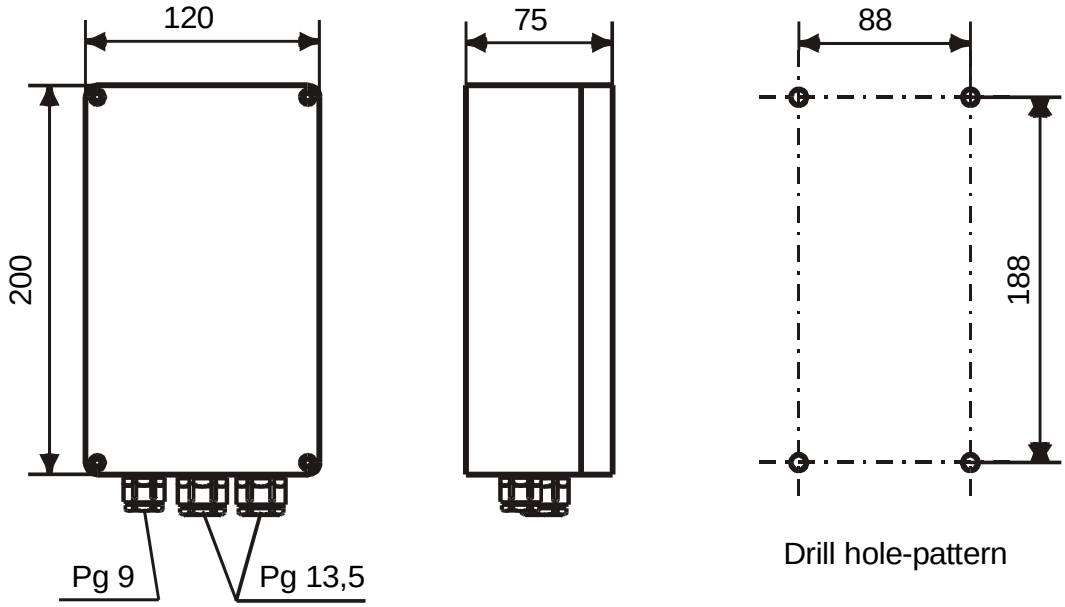

9 EC-Declaration of Conformity

Document-No.: **001290** Month: 06 Year: 08

Manufacturer: **A D O L F T H I E S G m b H & C o. K G**

Hauptstr. 76
D-37083 Göttingen
Tel.: (0551) 79001-0
Fax: (0551) 79001-65
email: Info@ThiesClima.com

Description of Product: **Wind Alarm Instrument**

Article No.	**4.3241.00.000**	**4.3241.00.001**	**4.3241.02.000**	**4.3241.02.001**
	4.3241.02.900	**4.3241.03.000**	**4.3242.01.000**	**4.3242.02.000**
	4.3242.05.000	**4.3242.06.000**	**4.3242.14.000**	

specified technical data in the document: **020713/04/08; 020534/02/99**

The indicated products correspond to the essential requirement of the following European Directives and Regulations:

2004/108/EC DIRECTIVE 2004/108/EC OF THE EUROPEAN PARLIAMENT AND OF THE COUNCIL of 15 December 2004 on the approximation of the laws of the Member States relating to electromagnetic compatibility and repealing Directive 89/336/EEC

2006/95/EC DIRECTIVE 2006/95/EC OF THE EUROPEAN PARLIAMENT AND OF THE COUNCIL of 12 December 2006 on the harmonisation of the laws of Member States relating to electrical equipment designed for use within certain voltage limits

552/2004/EC Regulation (EC) No 552/2004 of the European Parliament and the Council of 10 March 2004 on the interoperability of the European Air Traffic Management network (the interoperability Regulation)

The indicated products comply with the regulations of the directives. This is proved by the compliance with the following standards:

Reference number	Specification
IEC 61000-6-2: 2005	Electromagnetic compatibility Immunity for industrial environment
IEC 61000-6-3: 2006	Electromagnetic compatibility Emission standard for residential, commercial and light industrial environments
IEC 61010-1: 2001	Safety requirements for electrical equipment for measurement, control and laboratory use. Part 1: General requirements

Place: Göttingen Date: 27.06.2008

Legally binding signature: issuer:

....

Wolfgang Behrens, General Manager Joachim Beinhorn, Development Manager

This declaration certificates the compliance with the mentioned directives, however does not include any warranty of characteristics.
Please pay attention to the security advises of the provided instructions for use.

ADOLF THIES GmbH & Co. KG
Hauptstraße 76 37083 Göttingen Germany
P.O. Box 3536 + 3541 37025 Göttingen
Phone ++551 79001-0 Fax ++551 79001-65
www.thiesclima.com info@thiesclima.com